KSC-STD-Z-0005B
October 12, 1988
Superseding
KSC-STD-Z-0005A
September 21, 1977

DESIGN OF

PNEUMATIC GROUND-SUPPORT EQUIPMENT,

STANDARD FOR

ENGINEERING DEVELOPMENT DIRECTORATE

National Aeronautics and
Space Administration

John F. Kennedy Space Center

NASA

THIS PAGE INTENTIONALLY LEFT BLANK

KSC-STD-Z-0005B
October 12, 1988
Superseding
KSC-STD-Z-0005A
September 21, 1977

JOHN F. KENNEDY SPACE CENTER, NASA

DESIGN OF

PNEUMATIC GROUND-SUPPORT EQUIPMENT,

STANDARD FOR

ENGINEERING DEVELOPMENT DIRECTORATE APPROVED:

for Walter T. Murphy

JAMES D. PHILLIPS
DIRECTOR OF ENGINEERING DEVELOPMENT

TABLE OF CONTENTS

Section	Title	Page
1.	SCOPE	1
1.1	Scope	1
1.2	Limitations	1
1.3	General Criteria	1
2.	APPLICABLE DOCUMENTS	2
2.1	Governmental	2
2.1.1	Specifications	2
2.1.2	Standards	3
2.1.3	Drawings	4
2.1.4	Other Documents	5
2.2	Non-Governmental	6
3.	REQUIREMENTS	8
3.1	Distribution Piping or Tubing	8
3.1.1	Flared Tubing Runs	8
3.1.1.1	Flared Tubing Material	8
3.1.1.2	Flare Ends	8
3.1.1.3	Flared Fittings	8
3.1.1.3.1	Threaded Fittings	8
3.1.1.3.1.1	Interchangeability	10
3.1.1.3.1.2	Ports	10
3.1.1.3.2	Buttweld Fittings	10
3.1.1.4	Welding	10
3.1.1.5	Limitations	11
3.1.2	Superpressure Tubing Runs	11
3.1.3	Pipe Runs	11
3.1.3.1	Design	11
3.1.3.2	Pipe Material	11
3.1.3.3	Fittings	11
3.1.3.4	Mechanical Joints	11
3.1.4	Welding and Radiography	12
3.1.5	Marking/Identification	12
3.1.6	Component Material Restrictions	12
3.2	Hoses	12
3.2.1	Limitations	12
3.2.2	Construction Features	13
3.2.3	End Connections	13
3.2.4	Marking/Identification	13
3.2.5	Service Limitations	14

TABLE OF CONTENTS (cont)

Section	Title	Page
3.2.5.1	Inspection Criteria	13
3.2.6	Applications Design	13
3.2.6.1	Restraints	13
3.2.6.2	Flow-Induced Vibration	13
3.2.6.3	Permeability	14
3.3	Pressure Gages	15
3.3.1	Limitations	15
3.3.2	Selection	15
3.3.3	Construction Features	15
3.3.4	Pressure Connections	15
3.3.5	Marking	15
3.4	Pressure Relief Devices	16
3.4.1	Terminology and Definitions	16
3.4.2	Limitations	16
3.4.3	Installation	16
3.4.4	Pressure Relieving Requirements	16
3.4.5	Setting of Pressure Relief Devices	16
3.4.6	Materials	17
3.4.7	Pressure Connections	17
3.4.8	Discharge From Pressure Relief Devices	17
3.4.9	Certification/Marking of Pressure Relief Devices	17
3.4.10	Retest of Pressure Relief Devices	17
3.5	Pressure Regulators	18
3.5.1	Selection	18
3.5.2	Materials	18
3.5.3	Dome-Loaded Pressure Regulators	18
3.5.4	Manually Adjusted Spring-Loaded Press Regulators	18
3.5.5	Pressure Connections	18
3.5.6	Marking	19
3.6	Pressure Vessels	19
3.6.1	Design, Construction, Test, and Certification	19
3.6.2	Materials	19
3.6.3	Openings	19
3.6.4	Pressure Connections	19
3.6.5	Marking	19
3.7	Shutoff/Metering Valves	20
3.7.1	Materials	20
3.7.2	Balanced Valves	20
3.7.3	Pressure Connections	20
3.7.4	Design Features	20
3.7.5	Marking	20
3.8	Filters	20
3.8.1	Requirements	20

TABLE OF CONTENTS (cont)

Section	Title	Page
3.8.2	Materials	21
3.8.3	Element Performance	21
3.8.4	Pore Size	21
3.8.5	Ports	21
3.8.6	Maintenance	21
3.8.7	Marking	21
3.9	Castings	21
3.10	Pressure-Regulating Circuits	22
3.10.1	Design Requirements	22
3.10.2	Stages of Regulation	22
3.10.3	Redundancy	22
3.10.4	Isolation and Vent Valves	22
3.10.5	Pressure Relief Valves	22
3.10.6	Repair and Maintenance	22
3.10.7	Flow-Rate Contingency Factor	22
3.10.8	Pressure Variations	22
3.10.9	Dome Loading	27
3.11	Vent Systems	27
3.11.1	Applications	27
3.11.2	Vent Outlets	27
3.11.3	Backpressure	27
3.11.4	Multiple-Use Vents	28
3.12	Oxygen Systems	28
3.12.1	Definition	28
3.12.2	Fire Protection	28
3.12.3	Materials	28
3.12.4	Vents	28
3.12.5	Heat of Compression	28
3.12.6	Hazardproofing	28
3.12.7	Special Design Consideration	29
3.13	Hydrogen Systems	29
3.13.1	Fire Protection	29
3.13.2	Leakage	29
3.13.3	Vents	29
3.13.4	Materials	29
3.13.5	Hazardproofing	29
3.14	Hypergol Systems	29
3.14.1	Hypergol System Interface	29
3.14.2	Minimum Design Constraints	29
3.14.3	Optimum Design Constraints	32
3.14.4	Hypergol Migration Control	33
3.15	Electrical Design	33
3.16	Hazardproofing	33

TABLE OF CONTENTS (cont)

Section	Title	Page
3.16.1	Electrically Energized Equipment	33
3.16.2	Bonding and Grounding	33
3.16.3	Lightning Protection	33
3.17	Environmental Protection	33
3.17.1	Design Requirements	33
3.17.2	Limitations	33
3.17.3	Launch Environment	34
3.17.4	Corrosion Protection	34
3.18	Calibration and Checkout	34
3.18.1	Requirements	34
3.18.2	Test Connections	34
3.19	Standard Parts	35
3.19.1	Parts Selection/Standardization	35
3.19.2	Elastomeric Parts	35
3.20	Cleanliness	35
3.20.1	Requirements	35
3.20.2	Design Considerations	35
3.20.2.1	General	35
3.20.2.2	Components	36
3.20.2.3	Shipping and Storage	36
3.20.2.4	Fluid Sampling	36
3.21	Supports	36
3.21.1	Piping	36
3.21.2	Tubing	38
3.21.3	Welding	38
3.21.4	Dissimilar Metals	38
3.22	Allowable Stress (Safety Factors), Hydrostatic and Pneumatic (Proof) Test	38
3.22.1	Allowable Stress	38
3.22.2	Hydrostatic/Pneumatic Test	38
3.23	Leakage	39
3.24	Paneling Marking/Identification	39
3.24.1	Components	39
3.24.2	Flow Diagram	39
3.24.3	Title	39
3.25	Multiple-Fluid Systems	40
3.25.1	Definition	40
3.25.2	Requirements	40
3.25.3	Design	40
3.26	Temperature-Conditioned Fluids	40
3.26.1	Definition	40
3.26.2	Requirements	40
3.27	Safety and Reliability	41

TABLE OF CONTENTS (cont)

Section	Title	Page
3.27.1	System Assurance Analysis	41
3.28	Maintainability	41
4.	QUALITY ASSURANCE PROVISIONS	41
4.1	Design and Development Controls	41
4.2	Contractual Requirements	42
4.3	Acceptance Test Requirements and Certifications	42
5.	PREPARATION FOR DELIVERY	42
5.1	Packaging, Handling, and Transportation	42
5.2	Marking for Shipment	42
6.	NOTES	42
6.1	Intended Use	42

LIST OF ILLUSTRATIONS

Figure	Title	Page
1	Single-Stage Pressure-Reducing Circuit	23
2	Multiple-Stage Pressure-Reducing Circuit	24
3	Redundant Single-Stage Pressure-Reducing Circuit	25
4	Redundant Multiple-Stage Pressure-Reducing Circuit	26
5	Minimum Pneu/Hyper Design Constraints Circuit . .	30
6	Optimum Pneu/Hyper Design Constraints Circuit . .	31
7	Fluid Sampling	37

LIST OF TABLES

Table	Title	Page
1	Fitting Functional Equivalents	9

THIS PAGE INTENTIONALLY LEFT BLANK

KSC-STD-Z-0005B
October 12, 1988
Superseding
KSC-STD-Z-0005A
September 21, 1977

JOHN F. KENNEDY SPACE CENTER, NASA

DESIGN OF

PNEUMATIC GROUND-SUPPORT EQUIPMENT,

STANDARD FOR

This standard has been approved by the Engineering Development Directorate of the John F. Kennedy Space Center (KSC) and is mandatory for use by KSC and associated contractors.

1. SCOPE

1.1 Scope. This standard establishes the minimum engineering and technical limitations for materials, processes, methods, engineering practices, and designs to be applied to designed pneumatic ground-support equipment (GSE) intended for installation and use at KSC. Where the minimum requirements of this standard do not meet the minimum requirements of Level II Program documents, the latter shall take precedence. This standard does not apply to Portable and Mobile equipment covered by DOT-49 CFR regulations or life support equipment regulated by NIOSH, OSHA or KSC-STD-Z-0008.

1.2 Limitations. This standard applies to all equipment, whether installed in facilities or portable, handling gaseous nitrogen, helium, oxygen, hydrogen, breathing air, special oxygen-nitrogen mixtures and any other gas or gas mixture as may be designated by the Engineering Development Directorate. Facility compressed air systems operating at 250 lb/in^2 or less and vacuum systems shall be designed per accepted industry standards. Existing designs are not required to comply with this standard except that any design changes required as a result of the pressure vessel/system recertification program per KMI 1710.15 shall meet the minimum requirements of this standard.

1.3 General Criteria. All provisions and requirements of KSC-DE-512-SM shall be applicable to equipment designed in accordance with this standard. In the event of conflict between requirements of KSC-DE-512-SM and this standard, the requirements of this standard shall take precedence.

2. APPLICABLE DOCUMENTS

The following documents of the issue in effect on date of invitation for bids or request for proposal form a part of this standard to the extent specified herein.

2.1 Governmental.

2.1.1 Specifications.

John F. Kennedy Space Center (KSC), NASA

KSC-C-123	Surface Cleanliness of Fluid Systems
KSC-E-165	Electrical Ground-Support Equipment Fabrication
KSC-F-124	Specification for Fittings (Pressure Connections), Flared Tube
KSC-SPEC-Z-0003	Welding Stainless Steel and Invar 36 Pipe, Tubing, and Associated Fittings
KSC-SPEC-Z-0004	Welding, Structural, Carbon Steel, Stainless Steel, Low Alloy Steel, and Aluminum Alloys
KSC-SPEC-Z-0007	Tubing, Steel, Corrosion Resistant, Types 304 and 316, Seamless, Annealed
KSC-SPEC-Z-0008	Fabrication and Installation of Flared Tube Assemblies and Installation of Fittings and Fitting Assemblies
KSC-SPEC-Z-0016	Automatic Welding, Stainless Steel Pipe and Tubing, Invar 36 Pipe, Carbon Steel Pipe, Aluminum Pipe
KSC-SPEC-Z-0019	Age Control of Elastomeric Parts

George C. Marshall Space Flight Center, NASA

MSFC-SPEC-384	Leak Test Compound, LOX Compatible

Federal

QQ-S-763	Steel Bars, Shapes, and Forgings--Corrosion Resisting

Military

MIL-L-25567	Leak Detection Compound, Oxygen Systems

United States Department of Transportation (DOT)

DOT 49 CFR	Transportation, Hazardous Materials Regulations Board, Shipping Container Specifications

2.1.2 Standards.

John F. Kennedy Space Center, NASA

KSC-STD-152-2	Graphical Symbols for Drawings Part II: Mechanical Symbols
KSC-STD-C-0001	Protective Coating of Carbon Steel, Stainless Steel, and Aluminum on Launch Structures and Ground Support Equipment
KSC-STD-E-0002	Hazard Proofing of Electrically Energized Equipment
KSC-STD-E-0004	Pneumatic and Hydraulic Mechanical Components and Parts, Electrical
KSC-STD-E-0012	Bonding and Grounding
KSC-STD-E-0013	Lightning Protection for Facilities
KSC-STD-E-0015	Marking of Ground Support Equipment
KSC-STD-SF-0004	Safety Standard for Ground Piping Systems Color Coding and Identification
KSC-STD-Z-0008	Design of Life Support Systems and Equipment

George C. Marshall Space Flight Center, NASA

MC240	Boss, Standard Dimensions for Straight Thread

Military

MS16142	Boss, Gasket, Seal Straight Thread Tube Fitting, Standard Dimensions for

MS20995	Wire, Safety or Lock
MS33649	Bosses, Fluid Connection--Internal Straight Thread

Air Force-Navy Aeronautical Design Standard (AND)

AND10049	Bosses, Fluid Connection, Internal Straight Thread
AND10050	Bosses, Standard Dimensions for Gasket Seal Straight Thread

2.1.3 Drawings.

John F. Kennedy Space Center, NASA

75M04185	Identification Tag, Tubing and Hose Lines
79K05922	Panel Labels, Schematic Symbols, Fluid System
79K09561	Material Selection List for Gaseous Oxygen and Air Service
79K11948	Material Selection List for Type J Fluid Service
79K80245	Spud, Buttweld
79K80246	Union, Buttweld
79K80247	Elbow, 90° Buttweld
79K80248	Tee, Buttweld
79K80249	Elbow, 45° Buttweld
79K80265	Spud, Buttweld, Reducer-Adapter
79K80266	Union, Buttweld, Reducer
79K80267	Cross, Buttweld

2.1.4 Other Documents.

National Aeronautics and Space Administration (NASA)

NHB 5300.4 (1C)	Inspection System Provisions for Aeronautical and Space System Materials, Parts, Components, and Services
NHB 5300.4 (1D-2)	Safety, Reliability, Maintainability and Quality Provisions for the Space Shuttle Program
NHB 8060.1	Flammability, Odor, and Offgassing Requirements and Test Procedures for Materials in Environments That Support Combustion

John F. Kennedy Space Center, NASA

KHB 1710.2 SOP41	Kennedy Space Center Safety Practices Handbook Standard Operating Procedure
KHB 1710.15	KSC Pressure Vessel/System Recertification Handbook
KSC-DE-512-SM	Guide for Design Engineering of Ground Support Equipment and Facilities for Use at Kennedy Space Center
KSC-DE-P-360	Procedure for Performance of System Assurance Analysis
KSC-DE-P-5320.1	Selection of Parts/Components and Materials for Facilities, Systems and Equipment Design
KSC-GP-425	Engineering Standards
KSC-GP-435 Vol I	Engineering Drafting Practices Manual Ground Support Equipment
KSC-GP-1059	Environment and Test Specification Levels Ground Support Equipment For Space Shuttle System Launch Complex 39, Vol I and II
SR73-1020	Maintainability Criteria for Design Engineering

Lyndon B. Johnson Space Center, NASA

SN-D-0007	Space Shuttle Program Acceptance Data Package Requirements
JSC 08123	Certification of Flexhoses and Bellows for Flow Induced Vibration

Military

MIL-HDBK-5	Metallic Materials and Elements for Aerospace Vehicle Structures

(Copies of specifications, standards, drawings and publications required by contractors in connection with specific procurement functions should be obtained from the procuring activity or as directed by the Contracting Officer.)

2.2 Non-Governmental.

American National Standards Institute (ANSI)

ANSI B16.5	Pipe Flanges and Flanged Fittings
ANSI B16.9	Factory-Made Wrought Steel Buttwelding Fittings
ANSI B31.3	Chemical Plant and Petroleum Refinery Piping
ANSI B36.10M	Welded and Seamless Wrought Steel Pipe
ANSI B40.1	Gauges, Pressure and Vacuum, Indicating Dial Type--Elastic Element

(Application for copies should be addressed to the American National Standards Institute, Inc., 1430 Broadway, New York, NY 10018.)

American Society of Mechanical Engineers (ASME)

ASME Code	Boiler and Pressure Vessel Code, Section VIII, Divisions 1 and 2
PTC 25.3	Safety and Relief Valves

(Application for copies should be addressed to the American Society of Mechanical Engineers, 345 East 47th Street, New York, NY 10017.)

American Society for Testing and Materials (ASTM)

ASTM A182	Forged or Rolled Alloy-Steel Pipe Flanges, Forged Fittings, and Valves and Parts for High-Temperature Service
ASTM A213	Seamless Ferritic and Austenitic Alloy-Steel Boiler, Superheater, and Heat Exchanger Tubes
ASTM A266	Forgings, Carbon Steel, for Pressure Vessel Components
ASTM A276	Stainless and Heat Resisting Steel Bars and Shapes
ASTM A312	Seamless and Welded Austenitic Stainless Steel Pipe
ASTM A314	Stainless and Heat-Resisting Steel Billets and Bars for Forging
ASTM A351	Steel Castings, Austenitic, for High-Temperature Service
ASTM A403	Wrought Austenitic Stainless Piping Fittings
ASTM A514	High-Yield Strength, Quenched and Tempered Alloy Steel Plate, Suitable for Welding
ASTM A517	Pressure Vessel Plates, Alloy Steel, High-Strength, Quenched and Tempered
ASTM A582	Free Machine Stainless and Heat-Resisting Steel Bars, Hot-Rolled or Cold-Finished

(Application for copies should be addressed to the American Society for Testing and Materials, 1916 Race Street, Philadelphia, PA 19103.)

National Fire Protection Association (NFPA)

NFPA No. 50	Bulk Oxygen Systems at Consumer Sites
NFPA No. 50A	Gaseous Hydrogen Systems at Consumer Sites

NFPA No. 70 National Electric Code

(Application for copies should be addressed to the National Fire Protection Association, 60 Batterymarch Street, Boston, MA 02110)

Society of Automotive Engineers (SAE)

AS 568 Aerospace Size Standard for O-Rings

ARP 901 Bubble-Point Test Method

(Application for copies should be addressed to the Society of Automotive Engineers, Dept 010, Two Pennsylvania Plaza, New York, NY 10001.)

3. REQUIREMENTS

3.1 Distribution Piping or Tubing.

3.1.1 Flared Tubing Runs. Pneumatic distribution tubing runs shall be of seamless, stainless steel tubing fabricated and installed per KSC-SPEC-Z-0008. Tubes may be joined by use of 37-degree flared ends and threaded fittings or by use of buttweld joints and fittings. Alternate fittings are specified in 3.1.2.

3.1.1.1 Flared Tubing Material. Flared tubing shall meet the requirements of KSC-SPEC-Z-0007. Type 304 stainless steel tubing is the preferred material and KSC is the DOD/NASA depot manager for this material. Type 316 stainless steel tubing per KSC-SPEC-Z-0007 may be used as an alternate. KSC-SPEC-Z-0008 specifies sizes and pressure ratings of tubing to be used.

3.1.1.2 Flare Ends. Tubes shall either have a 37-degree flare, which has been formed on the tube end, or they shall have a butt-welded spud containing a machined 37-degree flare for joining tube to fittings. Tube sizes having wall thicknesses greater than 0.109 inch shall be fabricated with the buttwelded flare.

3.1.1.3 Flared Fittings. Flared tubing runs may be assembled by use of threaded fittings or a combination of threaded and butt-welded fittings. Fitting sizes shall be limited to 1/4 to 2 inch tube sizes.

3.1.1.3.1 Threaded Fittings. Threaded fittings using standard 37-degree flare end shall be per the appropriate KC standard listed in KSC-GP-425 (hereafter referred to by KC numbers) and procured per KSC-F-124.

Table 1. Fitting Functional Equivalents

Standard Fitting	SAE	AN	MS	Parker Hannifin	Allan Aircraft
KC103	AS1097				
KC106				TRTX-SS	AA67034
KC107				R6X-SS	AA67030
KC108				C5X-SS	AA67024
KC109				S6S-SS	AA67031
KC110				R5X-SS	AA67026
KC111				S5X-SS	AA67027
KC112	AS933		MS24487	F5X-SS	AA67022
KC113	AS1366	AN833	MS24394	WETX-SS	AA67018
KC114	AS1365	AN803	MS24390	WJJTX-SS	AA67021
KC115		AN894	MS24398		
KC116		AN816		FTX-SS	AA67006
KC117	AS1367	AN827	MS24403	KTX-SS	AA67005
KC118	AS1250	AN821	MS24401	ETX-SS	AA67003
KC119		AN784	MS24389		
KC120		AN783	MS24388		
KC121			MS20826	RTX-SS	AA67011
KC122			MS20825	STX-SS	AA67012
KC123	AS1252	AN824	MS24402	JTX-SS	AA67004
KC124	AS1100	AN832	MS24393	WTX-SS	AA67017
KC125	AS1368	AN919	MS24399		AA67001
KC126	AS1251	AN815	MS24392	LHTX-SS	AA67000
KC127	AS1253	AN834	MS24395	WJTX-SS	AA67020
KC128	AS1249	AN837	MS24396	WNTX-SS	AA67019
KC129				V5X-SS	AA67025
KC130	AS1369	AN806	MS24404	PNTX-SS	AA67035
KC131				C6X-SS	AA67028
KC132				[illegible]-SS	AA67029
KC133					
KC134					
KC135					
KC142		AN818		BTX-SS	AA67032
KC143			MS20819	TX-SS	AA67033
KC144	AS1037B				
KC150		AN929		FNTX-SS	AA67036
KC164					
AN924*		AN6289		WLN-SS	AA67051

*There is no KC equivalent for this configuration and as such the functionally equivalent parts are considered interchangeable size-for-size when the materials are 300 series stainless steel.

3.1.1.3.1.1 Interchangeability. The fittings described in KSC-GP-425 are functionally interchangeable with plain nose 37-degree flared tube fittings, except the maximum operating temperature is limited to 425 degrees F. Table 1 identifies the specific KC part numbers and their functional equivalents. KC fittings shall be substituted for the indicated fittings in all equipment under KSC design control when leaks occur or modifications are necessary.

3.1.1.3.1.2 Ports. The standard port design for use with the fittings specified herein shall be per MS33649. The MC240, AND10049, and AND10050 ports are inactive for design. MS16142 and the inactive specifications are generally compatible port designs but shall be avoided since occasional thread tolerance build-up on the KC fittings can prevent proper assembly of fitting to port. Where the system design pressure exceeds the maximum design pressure for that port-sized sized flared-tube fitting, all ports shall be of the superpressure type with internal threads. The pressure rating of pneumatic components shall not exceed the rated pressure of the tube fitting size that corresponds to the components port size. Pipe threads on pneumatic components shall be avoided except where extraordinary circumstances dictate their use.

3.1.1.3.2 Buttweld Fittings. Machined flares (spuds) may be buttwelded to tubing ends and subsequently joined to threaded fittings by using KC142 coupling nuts. Mechanical connections of this type may be used on tube sizes from 1/4 to 2 inch outside diameters. KSC designs may also specify permanent buttwelded tube joints utilizing any weld fitting in the configurations listed below:

Fitting	KSC Drawing No.
Spud, Buttweld	79K80245
Union, Buttweld	79K80246
Elbow, 90° Buttweld	79K80247
Tee, Buttweld	79K80248
Elbow, 45° Buttweld	79K80249
Spud, Buttweld, Reducer-Adapter	79K80265
Union, Buttweld, Reducer	79K80266
Cross, Buttweld	79K80267

3.1.1.4 Welding. Tube and buttweld fittings shall be joined by tungsten-inert gas (TIG) welding method according to the requirements of KSC-SPEC-Z-0016.

3.1.1.5 Limitations. The limitations and procedures of KSC-SPEC-Z-0008 shall be followed. Flareless fittings are prohibited in pneumatic GSE. The use of crush washers (flare savers) in flared-fitting connections is also prohibited. Self-flare fittings and brazed fittings shall be avoided. Threaded fittings listed in KSC-GP-425 are limited for use between -320 °F and +425 °F; however, use above 300 °F must be evaluated for adequacy on a case by case basis.

3.1.2 Superpressure Tubing Runs. For high pressure applications where flared tubing or piping is not appropriate, superpressure tubing and fittings per Autoclave Engineers,Inc., 2930 West 22nd Street, Erie, PA 16512 or equal shall be utilized. Superpressure tubing, fitting, and installation design shall be in strict accordance with manufacturer's instructions.

3.1.3 Pipe Runs. Buttwelded pipe is the approved alternate to the use of tubing for GSE pneumatic systems.

3.1.3.1 Design. All piping installations shall be designed in accordance with ANSI B31.3 and with the additional requirements specified herein.

3.1.3.2 Pipe Material. The preferred pipe material is seamless, cold-drawn, type 304L or type 316L stainless steel per ASTM A312 and ANSI B36.10M. Other piping materials may be used with the approval of the KSC Engineering Development Directorate.

3.1.3.3 Fittings. Weld fittings such as tees, crosses, elbows, and reducers for stainless steel pipe shall be of the buttweld type per ANSI B16.9 and shall be constructed of ASTM A403, Grade WP-316L or WP-304L, material. Fittings for mechanical joints in the form of elbows, crosses, tees, and hubs shall be per the applicable standard in KSC-GP-425 and may be used to facilitate assembly and maintenance.

3.1.3.4 Mechanical Joints. Mechanical joints in stainless steel piping shall be made of ASTM A182 F316 buttweld hubs (KC159), ASTM A182 F304 clamp assemblies (KC155), and type 17-4PH teflon-coated seal rings (KC162). All mechanical joints shall be assembled in accordance with KC163. Where system design dictates the use of industrial flanged type mechanical joints, they shall be in accordance with ANSI B16.5. Space allowance shall be made for disengagement of all mechanical joints.

3.1.4 Welding and Radiography. Unless otherwise approved by the Engineering Development Directorate, stainless steel piping shall be fabricated by buttwelding per KSC-SPEC-Z-0003 or KSC-SPEC-Z-0016 and shall be 100-percent radiographically inspected. Relief of this requirement for automatic TIG buttwelds in tubing is defined by KSC-SPEC-Z-0016 when optimum welding parameters are defined for production welding; however, random sampling with radiographic inspection shall be used after each relocation of the welding unit or every 50 welds. Consumable insert welding rings shall be used where feasible.

3.1.5 Marking/Identification. All piping and tubing runs external to pneumatic regulation/control panels/consoles shall be identified in accordance with KSC-STD-SF-0004. Individual lengths or fabricated assemblies of pipe shall additionally be identified with the contractor's tracking number (when applicable), pipe size and schedule number, test pressure, and date of test. Pipe identification data shall be affixed to the pipe by means of an attached metal band per KSC drawing 75M04185, which has been die stamped or electrochemically etched per KSC-STD-E-0015. Alternately, the pipe information may be stamped or embossed on a "dog tag" (NSN 8465-00-242-4804) and attached to the pipe by two turns of stainless steel wire (0.032-inch minimum diameter) per MS20995. Pipes that extend over 100 feet must have additional metal identification bands or tags spaced at intervals not to exceed 100 feet. Tube identification requirements are specified in KSC-SPEC-Z-0008.

3.1.6 Component Material Restrictions. The use of 17-4PH stainless steel shall be avoided where possible due to its susceptibility to stress corrosion cracking at low heat treatment levels. Any 17-4PH stainless steel specified shall require heat treatment to condition H1025 or higher. Where 300-series stainless steels are specified, type 303 should be avoided wherever possible due to susceptibility to stress corrosion cracking.

WARNING

**TYPE 17-4PH AND TYPE 303
ARE PARTICULARLY SENSITIVE TO STRESS CORROSION
IN THE KSC ENVIRONMENT AND SHALL BE PROTECTED
PER PARAGRAPH 3.17.4**

3.2 Hoses.

3.2.1 Limitations. The maximum operating pressure for hoses shall not exceed one-forth of the manufacturer's specified minimum burst pressure (See 3.22.1). Hoses shall be used only when required for hookup of portable equipment or to provide for move-

ment between interconnecting fluid lines when no other feasible means is available.

3.2.2 Construction Features. Hoses shall consist of a seamless polytetrafluoroethylene or compounded polytetrafluoroethylene inner tube reinforced with a 300-series stainless steel wire construction of braid or spiral wrap, or a combination thereof, or shall consist of a flexible 300-series stainless steel pressure carrier reinforced with 300-series stainless steel braid.

3.2.3 End Connections. Hoses shall be provided with 300-series or 17-4PH stainless steel end fittings of the coupling-nut, 37-degree flared type or with fittings to mate with the appropriately sized pipe hub (KC159). Any 17-4PH stainless steel used shall be condition H1025 or greater.

WARNING

FOR HOSES USED IN HYDROGEN APPLICATIONS, 17-4PH STAINLESS STEEL SHALL NOT COME IN CONTACT WITH PRESSURIZED HYDROGEN (17-4PH IS SUSCEPTIBLE TO HYDROGEN EMBRITTLEMENT).

3.2.4 Marking/Identification. Each hose shall be provided with an identification tag that is permanently and legibly marked with the following minimum information:

a. Date (month and year) of hydrostatic test

b. Maximum Rated Working Pressure

c. KSC part number if applicable

d. Vendor name and part number

e. Service Media (Only for dedicated system fluid hoses in support of any hydrocarbon or hypergolic liquid system.)

The above information shall be provided on the hose by means of an attached metal band per KSC drawing 75M04185, which has been die stamped or electrochemically etched per KSC-STD-E-0015. Alternately, the hose information may be stamped or embossed on a "dog tag" (NSN 8465-00-242-4804) that is attached by a nylon-coated steel cable (0.040-inch minimum diameter)(FSN 4010-00-K03-8998) per MIL-W-83420. The cable ends shall be secured with an electro-tin-plated copper ferrule or with a copper wire-rope swaging sleeve. Close proximity to hypergol systems may require the use of other materials for the ferrule or swaging sleeve.

3.2.5 Service Limitations. Hose assemblies shall require hydrostatic testing only at the time of fabrication. All flex hoses in positive pressure applications shall be visually inspected over the entire length at least annually for evidence of damaged fittings, kinks, broken wire braid, or other signs of degradation. If the hose can not be inspected over the entire length in place, it shall be removed and inspected. The hose shall be replaced if any degradation is found. The date (month and year) of the latest inspection, the inspection procedure number, and the inspection organization shall be documented on the hose by means of a permanent tag such as a "dog tag" marked and attached as described in Paragraph 3.2.4.

3.2.5.1 Inspection Criteria. The cognizant design organization shall establish any special inspection criteria for hoses. This special criteria and the inspection criteria and interval defined by 3.2.5 shall be defined in the system Operating and Maintenance Requirements Document (OMRSD) or other operating and maintenance documents. Severity of the operating environment, type of service fluid, and operating pressure shall be considered in establishing shorter inspection intervals. Coordination with the safety, reliability, and quality assurance organization is recommended.

3.2.6 Applications design.

3.2.6.1 Restraints. Flex hose installations designed for 150 lb/in^2 gage or greater shall incorporate hose restraints in accordance with KHB 1710.2 SOP41. Eyebolts or other anchor points shall be provided for attachment of required hose restraints and shall be capable of withstanding any loads which could occur should the hose break in service.

3.2.6.2 Flow-Induced Vibration. Designs utilizing convoluted, unlined bellows or flexible metal hoses shall include analysis per JSC 08123 to preclude premature failure due to flow-induced vibration. Acoustic-coupling which can intensify the stresses caused by flow-induced vibration, shall be avoided by ensuring that normal fluid flow requirements do not exceed a velocity of Mach 0.2.

3.2.6.3 Permeability. Some gases such as helium and hydrogen permeate slightly through hoses utilizing a polytetrafluoroethylene or compounded polytetrafluoroethylene inner liner tube. In applications where such permeation is undesirable, metal hose shall be used subject to the requirements of Paragraph 3.2.6.2.

3.3 Pressure Gages.

3.3.1 Limitations. All pressure gages shall conform to the requirements of ANSI B40.1 except as specified herein. Pressure gages which are part of a cylinder regulator assembly such as used with cutting, welding or other industrial type applications are exempt from these requirements as are gages associated with pneumatic controllers, positioners, and other standard process control equipment, provided the parts of the gage which come in contact with the fluid are compatible per 79K09561 and/or 79K11948.

WARNING

PRECISION PRESSURE GAGES SUCH AS MANUFACTURED BY HEISE OR WALLACE AND TIERNAN SHOULD BE AVOIDED IN SYSTEM DESIGNS DUE TO POTENTIAL MATERIALS COMPATIBILITY PROBLEMS. WHERE REQUIRED, EXTREME CARE SHOULD BE USED IN THEIR SELECTION.

3.3.2 Selection. Pressure gages shall be selected so that the normal working pressure falls within the middle half of the scale range, except for gages used in applications that require a very wide range of operating pressure. For these applications, the pressure gages shall be selected so that the maximum pressure that can be applied will not exceed the scale range of the gage.

3.3.3 Construction Features. Pressure gages shall be of one-piece, solid-front, full diameter pressure relief back case construction utilizing a window made of high impact non-cracking plastic, heat treated glass, or laminated glass. Gages shall be designed for bolted flush front-panel mounting. All pressure gages shall be provided with a bourdon-tube bleeder or equivalent device to facilitate cleaning. All material normally in contact with the service fluid shall be type 316 stainless steel except that the bourdon-tube bleed screw may be made from any of the 300-series stainless steels. Liquid filled case gages shall not be used.

3.3.4 Pressure Connections. The pressure connection shall be the low-back type with an MS33649-4 threaded port for scale ranges through 10,000 lb/in^2. Gages subject to working pressures over 10,000 lb/in^2 shall have a 1/4-inch superpressure port with a 9/16-18 internal thread.

3.3.5 Marking. All pressure gages shall be permanently marked with the manufacturer's name or trademark, the manufacturer's part number, and KSC part number (if applicable). If applicable, the serial number should be included.

3.4 Pressure Relief Devices.

3.4.1 Terminology and Definitions. All terminology and definitions regarding pressure relief devices shall be consistent with ASME Code Section VIII, Division 1, paragraph UG-125 and ANSI/ASME PTC 25.3. For the purposes of this standard, set pressure is to be considered the same as the code definition of popping pressure, and cracking pressure is to be considered the same as the code definition of start-to-discharge pressure.

3.4.2 Limitations. Overpressure protection for KSC pneumatic ground support equipment (GSE) shall be provided by means of conventional safety relief valves or pilot operated pressure relief valves only, except that a rupture disc may be installed in series with either type valve to prevent loss of valuable or hazardous fluids, provided that the limitations of ASME Code, Section VIII, Division 1, paragraphs UG-127(a)(3)(b) and UG-127(a)(3)(c) are met. Where possible, the required relieving capacity shall be provided by a single valve. Overpressure protection for DOT cylinders shall conform to DOT CFR49.

3.4.3 Installation. For pressure vessels, installation of the pressure relief device(s) shall be in accordance with ASME Code, Section VIII, Division 1, Paragraph UG-135. For systems, a pressure relief device shall be installed as close as is practical downstream of each pressure reducing device (regulator) or downstream of any source of pressure (compressors, gas rechargers, etc.) whenever any portion of the downstream system cannot withstand the full upstream pressure.

3.4.4 Pressure Relieving Requirements. For pressure vessels, the required total relieving capacity required shall be determined in accordance with ASME Code, Section VIII, Division 1, paragraph UG-133 or Division 2, Paragraph AR150, as applicable. For piping/tubing systems, the relieving capacity of the relief device shall be equal to or greater than the maximum flow capability of the upstream pressure regulator or pressure source and shall prevent the pressure from rising more than 10% above the system design pressure (Reference ANSI/ASME B31.3, Paragraph 301.2). See also ANSI/ASME B31.3, Paragraph 322.6.3.

3.4.5 Setting of Pressure Relief Devices. Pressure relief devices shall be set to operate at a pressure not to exceed the Maximum Allowable Working Pressure (MAWP) of the vessel or the design pressure of the downstream piping/tubing system involved (including flight systems) and the set limits shall be specified in the Operating and Maintenance Requirements Document (OMRSD) or other operating and maintenance documents. See ASME Code, Section VIII, Division 1, paragraphs UG-134(a), UG-134(b), UG-

134(c), UG-134(d)(1) and ANSI/ASME B31.3 Paragraph 322.7.

3.4.6 Materials. The body and other pressure containing parts for pressure relief devices shall be 300-series stainless steel per ASTM A182, ASTM A276, ASTM A314, ASTM A582, QQ-S-763, or as described in Section 3.9. DOT cylinders or trailer relief devices may contain parts of brass or bronze. All materials that normally contact the service fluid shall be compatible with the fluid per 79K09561 and/or 79K11948.

3.4.7 Pressure Connections. Pressure connections for tubing applications shall have internal threads per 3.1.1.3.1.2. For piping applications, pressure connections shall be of a type that will mate with the appropriate sized KC159 hub. Normally, the inlet and outlet piping or tubing should be no smaller than the corresponding connections on the relief device to prevent chattering and/or the reduction of the flow capacity of the relief device. Where conditions require smaller inlet and outlet lines, an analysis shall be performed to ensure adequate relieving capacity is provided.

3.4.8 Discharge From Pressure Relief Devices. The effects of the discharge from relief devices shall be assessed and analyized to ensure that operation of the device will not be hazardous to personnel or equipment. Items to be analyized are thrust loads, noise, impingement of high-velocity gas or entrained particles, toxicity, oxygen enrichment, and flammability. When relief devices discharge into piped disposal systems, the provisions of Section 3.11 shall apply.

3.4.9 Certification/Marking of Pressure Relief Devices. Certification of flow capacity and marking of relief devices shall be in accordance with ASME Code, Section VIII, Division 1, paragraphs UG-127, UG-129, UG-131, and UG-132, as applicable. All relief valves shall be permanently marked with the manufacturer's name or trademark, the manufacturer's part number, KSC part number (if applicable), and set pressure. If applicable, the serial number and flow direction indication should be included.

3.4.10 Retest of Pressure Relief Devices. All pressure relief valves shall be retested periodically for the proper set pressure. The retest interval shall be defined in the system Operating and Maintenance Requirements Specifications Document (OMRSD) or other operating and maintenance documentation.

3.5 Pressure Regulators.

3.5.1 Selection. Pressure regulators shall be selected to maintain set outlet pressures within required system tolerance over the entire range of expected flow rates. Balanced-valve pressure regulators shall be used where widely varying inlet pressures would cause the set outlet pressure to exceed required tolerances. For each stage of regulation, it is desirable that the ratio of upstream pressure to downstream pressure not exceed 5 for optimum control of pressure and flow and to minimize problems in sizing pressure-relief devices. For design utilizing gas cylinders , i.e., "K"-bottles as the pressure source, standard commercially available cylinder regulators (including gages) may be utilized.

3.5.2 Materials. Except for cylinder regulators described in paragraph 3.5.1., pressure regulator bodies and other pressure containing parts shall be constructed of 300-series stainless steel. All materials that normally contact the service fluid shall be compatible with the fluid per 79K09561 and/or 79K11948.

3.5.3 Dome-Loaded Pressure Regulators. Dome-loaded pressure regulators shall be of the externally loaded type, except where extraordinary circumstances require internal loading. The dome shall be capable of operating at the maximum rated inlet pressure of the regulator. The regulator diaphragm/piston shall also withstand a differential pressure equal to the maximum rated inlet/outlet pressure with no damage (See Para. 3.10.9).

3.5.4 Manually Adjusted Spring-Loaded Pressure Regulators. Spring-loaded pressure regulators are typically used for low-flow or dead-ended applications where very accurate control of the outlet pressure is required. For dome-loading applications, the spring-loaded pressure regulator used shall incorporate an internal relief (back bleed) feature which decreases the outlet pressure as the manual adjustment is backed off. Manually adjusted pressure regulators shall reach a positive stop at both ends of the adjustment range. Application or removal of force to the manual adjustment shall not cause disassembly of the pressure-containing structure of the pressure regulator.

3.5.5 Pressure Connections. For flared-tubing applications, pressure regulators shall have internal threaded ports per Paragraph 3.1.1.3.1.2. For piping applications, pressure regulators shall be provided with inlet and outlet connections that will mate with the appropriately sized pipe hub (KC159).

3.5.6 Marking. All pressure regulators shall be permanently marked with the manufacturer's name or trademark, the manufacturers' part number, KSC part number (if applicable), and design pressure. If applicable, the serial number and flow direction indication should be included.

3.6 Pressure Vessels.

3.6.1 Design, Construction, Test, and Certification. All pressure vessels shall be designed, constructed, tested, certified, and code stamped in accordance with the ASME Code, Section VIII, Division 1 or Division 2. All ASME Code stamped vessels shall be registered with the National Board of Boiler and Pressure Vessel Inspectors. All pressure vessels shall be documented for recertification per KHB 1710.15. DOT cylinders should not normally be used as permanently installed pressure vessels in systems designed per this standard. However, when it is necessary to use DOT cylinders as pressure vessels, appropriate criteria regarding periodic retest, etc., required by DOT CFR 49 shall be included in the Operating and Maintenance Requirements Specification Document (OMRSD) or other operating and maintenance instructions. When DOT vessels are used in permanent systems, DOT ratings may be used for the vessel only.

3.6.2 Materials. SA514, SA517, or other alloys with substantially the same properties as T-1 steel (manufactured by United States Steel Corporation) shall not be used for pressure vessels.

3.6.3 Openings. Pressure vessels constructed in accordance with the ASME Code shall be provided with not less than two openings, one for connection to system piping and one for inspection purposes.

3.6.4 Pressure Connections. All openings for system pipe connections in pressure vessels constructed in accordance with the ASME Code shall be provided with connections that will mate with the appropriately sized pipe hub (KC159).

3.6.5 Labeling. In addition to the ASME code marking requirements, the maximum pressure at which pressure vessels will be normally operated and the name of the working fluid shall be painted in a conspicuous location on pressure vessels. This additional labeling shall be legible at a distance of 50 feet. Where multiple vessels are used to store the same working fluid, only the most visible vessel in the group need be labeled.

3.7 Shutoff/Metering Valves.

3.7.1 Materials. Valve bodies and other appropriate parts shall be constructed of 300-series stainless steel per ASTM A182, ASTM A276, ASTM A314, QQ-S-763, or as described under Section 3.9. All materials that normally contact the service fluid shall be compatible per 79K09561 and/or 79K11948.

3.7.2 Balanced Valves. Balanced poppet manual valves that utilize external balancing ports or vents open to the atmosphere shall not be used.

3.7.3 Pressure Connections. Valves used in flared-tubing system applications shall have internal threaded ports per Paragraph 3.1.1.3.1.2. Valves used in piping system applications shall be provided with connections that will mate with appropriately sized pipe hub (KC159).

3.7.4 Design Features. Valve-stem travel shall be limited by a positive stop at each extreme position. The application or removal of force to the stem-positioning device shall not cause disassembly of the pressure-containing structure of the valve. Stem-position indicators (where used) shall sense position of the stem directly, not the position of the actuating device. Shutoff valves shall be capable of isolating full-rated pressure from either side and shall be installed in accordance with the manufacturers' recommended flow direction for normal operation in each particular application. Manually actuated ball valves shall be equipped with positive local identification of flow-path position. Split-body valves utilizing flat nonmetallic body gaskets shall be designed to restrain the gasket radially and shall be provided with concentric serrations on the portions of the body halves mating with the gasket faces. Valves used in flared-tubing system applications shall be designed for panel mounting.

3.7.5 Marking. All shutoff/metering valves shall be permanently marked with the manufacturer's name or trademark, the manufacturers' part number, KSC part number (if applicable), and design pressure. If applicable, the serial number and flow direction indication should be included.

3.8 Filters.

3.8.1 Requirements. Filters shall be installed immediately upstream of all interfaces where control of particulate matter is critical and at other appropriate points as required to control particulate migration. Selection of filters shall be based on a careful analysis of overall system performance requirements to ensure that maximum protection of critical components with the

least performance penalty (pressure drop) is provided. Tee-type filters are preferred over in-line types since the tee-type filters can be maintained without disconnecting fluid system fittings. All filters shall be designed with replaceable elements.

3.8.2 Materials. Filter housing and elements shall be constructed of 300-series stainless steel. The element construction should be welded in lieu of soldering or brazing whenever possible. All materials that normally contact the service fluid shall be compatible per 79K09561 and/or 79K11948.

3.8.3 Element Performance. Filter elements shall maintain filtering quality and not be damaged in any way when subjected to worst-case system conditions (i.e., maximum design flow rate and element clogged to its maximum design capability). Where possible, filter elements shall be designed to withstand a differential pressure equal to or greater than the maximum operating pressure to which they will be subjected in the system without degradation of the filter element bubble point.

3.8.4 Pore Size. Determination of the largest pore or hole size of filters shall be in accordance with ARP 901.

3.8.5 Ports. Filters provided for flared-tubing systems shall have inlet and outlet ports per Paragraph 3.1.1.3.1.2. Differential pressure ports, when present, shall be per MS33649-4. For piping system applications, filters shall be provided with inlet/outlet connections that will mate with the appropriate pipe hub (KC159).

3.8.6 Maintenance. Definitive maintenance requirements and instructions for filters including changing, replacing, and cleaning shall be included in the system Operating and Maintenance Requirements Specifications Document (OMRSD) or other operating and maintenance instructions. The design for Tee-type filters shall provide adequate clearance for filter element replacement. Designs involving straight-line filters should provide for replacement of the complete filter assembly with a spare.

3.8.7 Marking. All filters shall be permanently marked with the manufacturer's name, the KSC and/or the manufacturer's part number, flow direction and rated operating pressure. If applicable, the serial number should be included.

3.9 Castings. All castings subjected to pressure shall be constructed of austenitic stainless steel per ASTM A351, Grade CF8M or CF8.

3.10 Pressure-Regulating Circuits.

3.10.1 Design Requirements. The design of pressure-regulating circuits shall be predicated upon a detailed analysis of the system requirements including those downstream of the design interface. Required accuracy of regulation, minimum and maximum flow rates expected, reliability required, and operational requirements shall be considered in the analysis. Figures 1 through 4 illustrate typical pressure-regulating circuit schematics showing desired components.

3.10.2 Stages of Regulation. The number of stages of regulation shall be based on criteria specified in Section 3.5.

3.10.3 Redundancy. Redundant regulation circuits shall be designed for automatic switchover and in such a manner that major components such as filters, regulators, and safety relief valves in either flow circuit can be repaired in place or be removed and replaced without interrupting the flow in the parallel circuit.

3.10.4 Isolation and Vent Valves. Inlet and outlet isolation valves and appropriate intermediate vent valves shall be provided for shutdown and maintenance. The inlet and outlet isolation valves shall be bi-directional valves capable of isolating maximum system operating pressure in both directions without seat failure. Normal venting shall not backflow filters.

3.10.5 Pressure-Relief Devices. Pressure-relief devices shall be located as close as practical to pressure-regulator outlets and shall meet the requirements of Section 3.4.

3.10.6 Repair and Maintenance. All pressure-regulating circuits shall be designed so that all components can be easily removed and replaced. Allowance shall be made for tool clearance and disengagement of mechanical joints. Check valves shall not be used as the sole pressure-isolation device for maintenance and repair operations involving opening of the pressure system.

3.10.7 Flow-Rate Contingency Factor. Pressure-regulating circuits shall be designed with the capability of maintaining outlet pressure within required tolerances at a flow rate not less than 20 percent above the normal system requirements.

3.10.8 Pressure Variations. The limits of variation (tolerance) allowed on the outlet pressures of each pressure regulator in a circuit shall be shown on all mechanical or electromechanical schematic drawings.

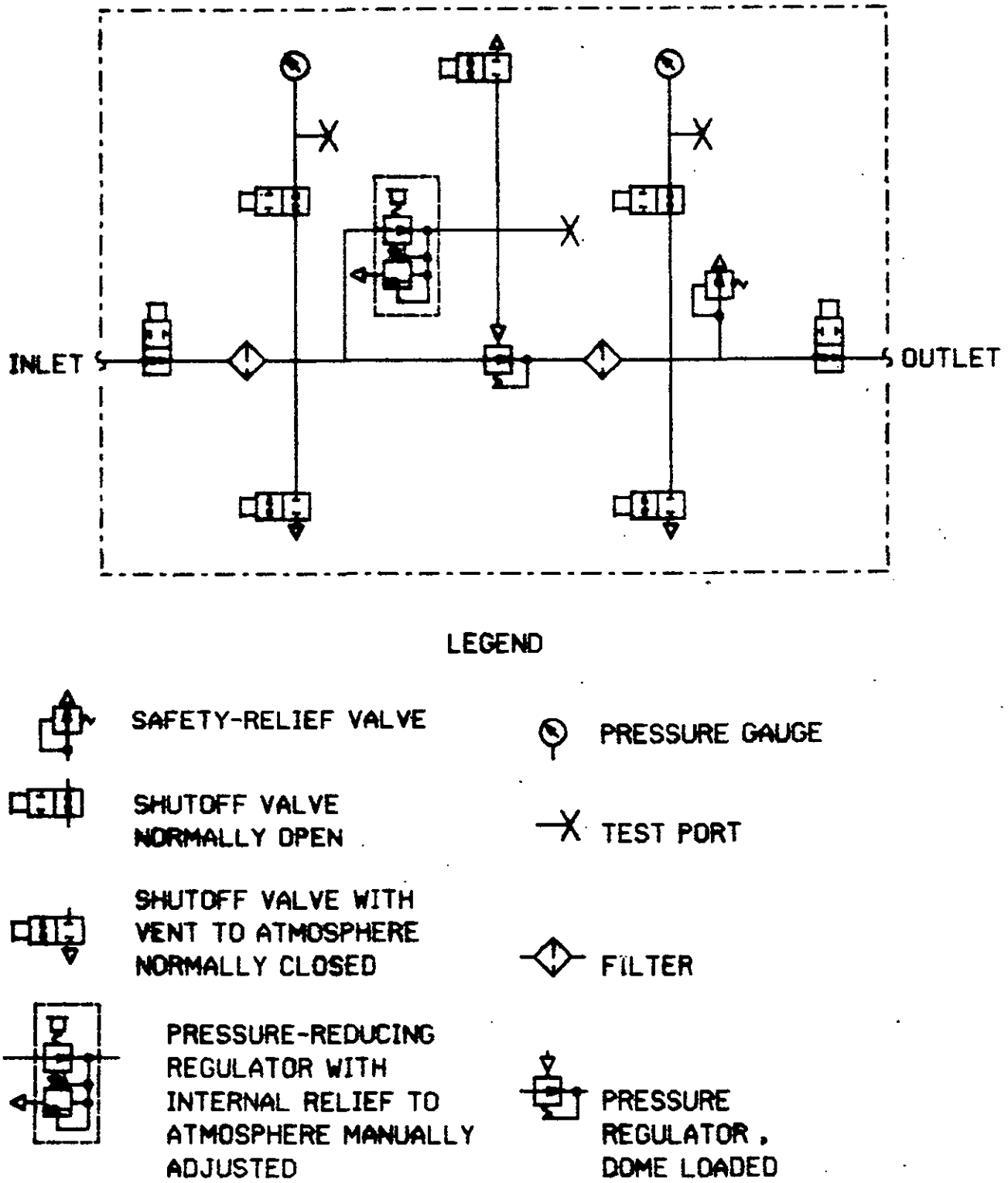

FIGURE 1. SINGLE-STAGE PRESSURE-REDUCING CIRCUIT

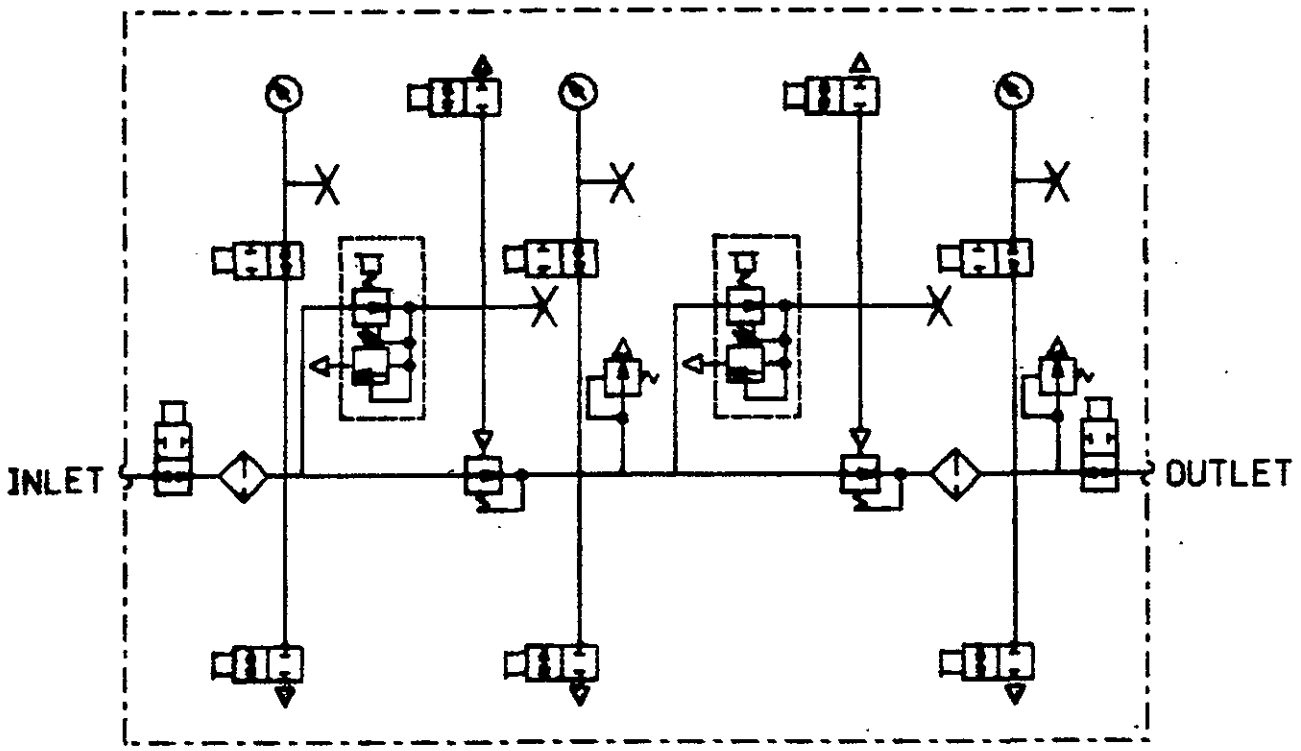

LEGEND

SAFETY-RELIEF VALVE

PRESSURE GAUGE

SHUTOFF VALVE
NORMALLY OPEN

TEST PORT

SHUTOFF VALVE WITH
VENT TO ATMOSPHERE
NORMALLY CLOSED

FILTER

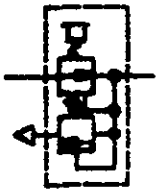
PRESSURE-REDUCING
REGULATOR WITH
INTERNAL RELIEF TO
ATMOSPHERE MANUALLY
ADJUSTED

PRESSURE
REGULATOR ,
DOME LOADED

FIGURE 2. MULTIPLE-STAGE PRESSURE- REDUCING CIRCUIT
(ADDITIONAL STAGES TO BE ADDED AS REQUIRED)

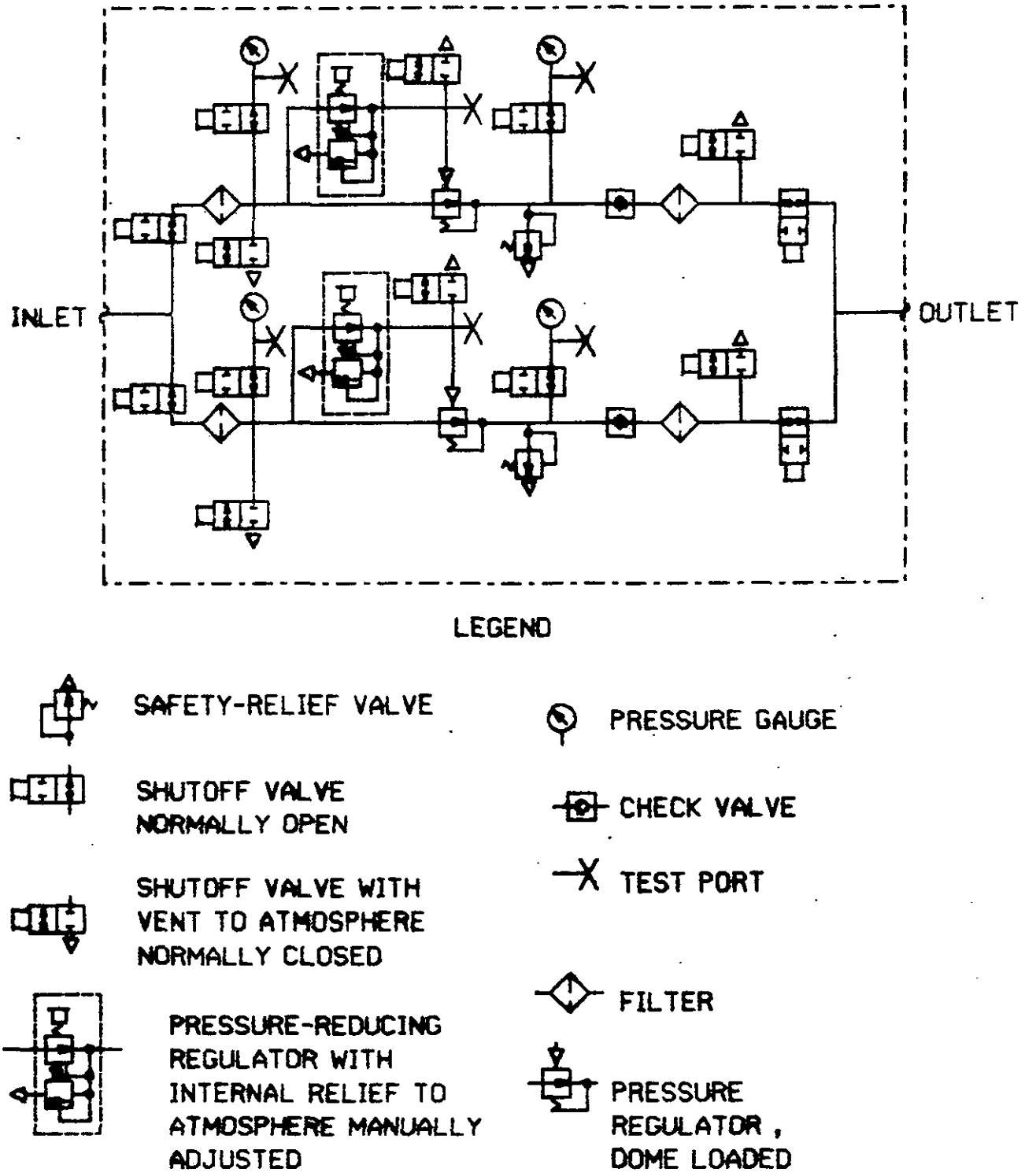

FIGURE 3. REDUNDANT SINGLE-STAGE PRESSURE-REDUCING CIRCUIT

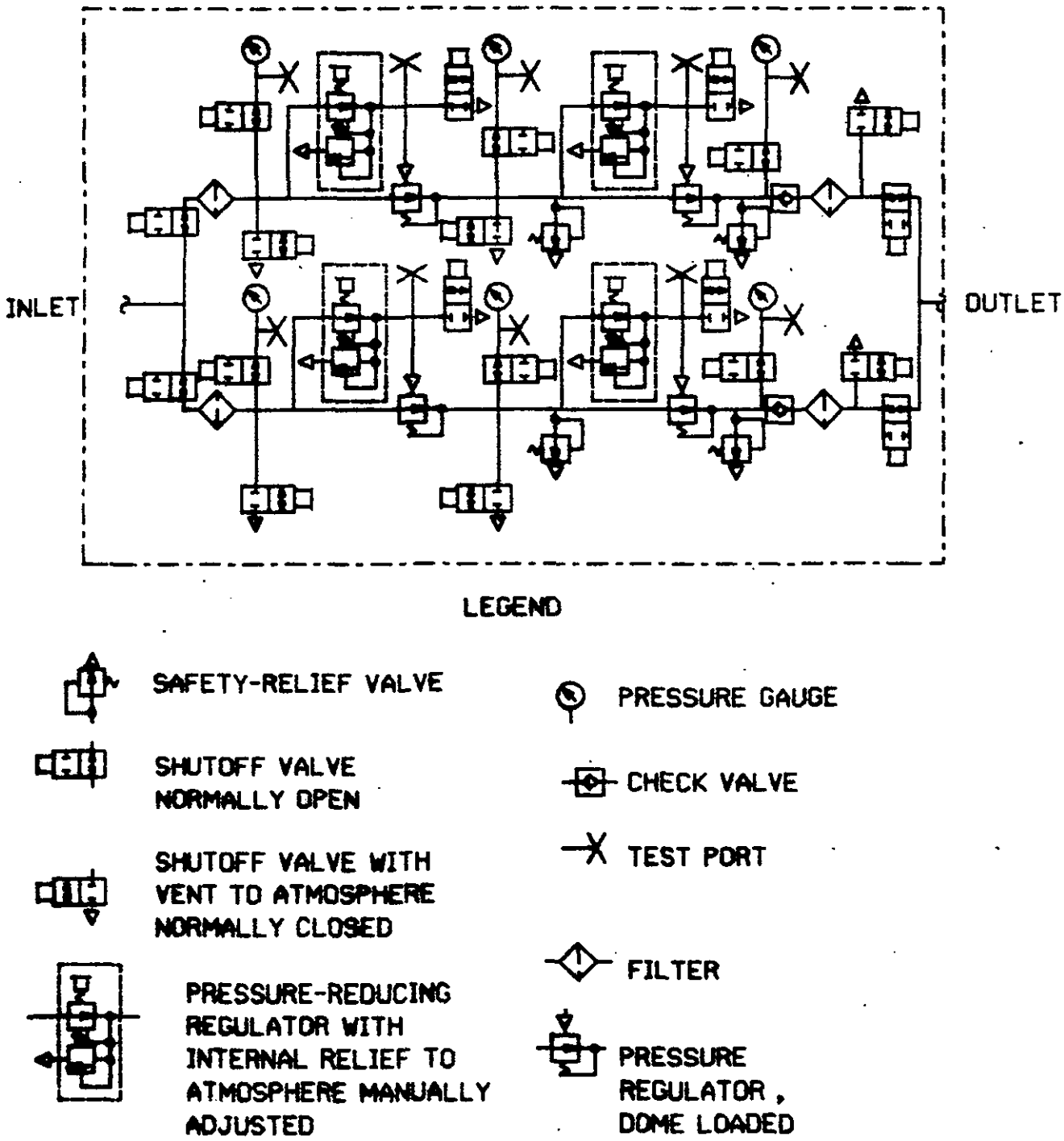

FIGURE 4. REDUNDANT MULTIPLE-STAGE PRESSURE-REDUCING CIRCUIT
(ADDITIONAL STAGES TO BE ADDED AS REQUIRED)

3.10.9 Dome Loading. It is desirable that dome-loaded pressure regulators be loaded by means of a separate spring-loaded, hand-operated regulator having an automatic downstream pressure-relief (back bleed or internal self venting) capability (see Paragraph 3.5.3). A separate pressure-relief device is not normally required in regulator dome-loading circuits, and designs incorporating such pressure-relief devices should not be used. A test connection and a vent valve shall be provided in the dome-loading circuit downstream of the loading regulator in accordance with Section 3.18.

3.11 Vent systems.

3.11.1 Applications. Vent systems are required for disposal of all hazardous fluids and may also be required for protection of personnel from excessive noise, high velocity impingement, or where a concentration of inert gas could lower the oxygen content of the air below an acceptable level. Oxidizers and fuels shall not be discharged into the same vent system. Vent systems handling hazardous fluids (other than oxygen) shall be equipped with a means of inerting the vent system with a gas such as nitrogen or helium but compatible with all interfacing systems.

3.11.2 Vent Outlets. Vent system outlets shall be in a location normally inaccessible to personnel and shall be conspicuously identified. Outlets shall be protected against rain intrusion and entry of birds, insects, and animals. Oxidizer and fuel vent outlets to the atmosphere shall be separated sufficiently to prevent mixing of vented fluids. All vent outlets shall be designed so as to prevent accumulation of vented fluid in dangerous concentrations (i.e. oxygen rich) in areas frequented by unprotected personnel or motor vehicles. Hydrogen vents shall discharge to atmosphere at a location where possible ignition of the venting hydrogen will not present a hazard and should include static grounds at the vent outlets. In addition, all vent outlets shall be designed to preclude vented fluid from impinging on unprotected personnel. Special attention shall be given to the design of vent line supports at vent outlets due to potential thrust loads. See ANSI/ASME B31.3, Paragraph 322.6.2.

3.11.3 Backpressure. Vent systems shall be sized to provide minimum backpressure consistent with required venting flow rates. In no case shall the backpressure interfere with the proper operation of safety relief devices or pneumatically operated devices. A design analysis shall be performed to ensure that excessive backpressure will not occur in vent systems. See ASME Code, Section VIII, Division 1, Paragraph UG-135(g).

3.11.4 Multiple-Use Vents. Each line venting into a multiple-use vent system shall be protected against back pressurization by means of a check valve if the upstream system cannot withstand the backpressure or where contamination of the upstream system cannot be tolerated.

3.12 Oxygen Systems.

3.12.1 Definition. For the purposes of this standard, oxygen systems are defined as any system of pressurized gaseous oxygen , breathing air mixtures operating above 100 lb/in^2 gage, oxygen/inert gas mixtures where the partial pressure of oxygen exceeds 25 lb/in^2, and compressed air operating above 250 lb/in^2 gage.

3.12.2 Fire Protection. Oxygen systems shall conform to the requirements of NFPA No. 50 except as specified herein.

3.12.3 Materials. All materials used in contact with oxygen, including breathing gas mixtures, shall satisfy the requirements of NHB 8060.1. Oxygen-compatible materials and the conditions governing their use are listed in KSC drawing 79K09561.

3.12.4 Vents. All oxygen-handling equipment shall be provided with vent capabilities meeting the requirements of Section 3.11.

3.12.5 Heat of Compression. Special care shall be taken in the design of oxygen systems to minimize the heating effect due to rapid increases in pressure. Fast-opening valves which can produce high velocity kinetic effects and rapid pressurization shall be avoided. Shutoff valves that cannot be throttled to prevent rapid pressurization of downstream components shall be provided with a small bypass metering valve to allow slow pressurization of the down stream system before the main shutoff valve is opened.

3.12.6 Hazardproofing. All equipment used in oxygen systems shall meet the requirements of Section 3.16.

3.12.7 Special Design Considerations. Special care shall be exercised in the design to keep normal operating flow velocities low (under Mach 0.2) and minimize contamination by rigid system cleaning requirements, installation of filters at strategic locations, and consideration for ease of field cleaning to maintain cleanliness. Filters should have a rating of 10 microns absolute maximum. See Section 3.8.

3.13 Hydrogen Systems.

3.13.1 Fire Protection. Hydrogen systems shall conform to the requirements of NFPA No. 50A except as specified herein.

3.13.2 Leakage. Special care shall be taken in the design of hydrogen systems to ensure that they remain leaktight in accordance with Para. 3.23.

3.13.3 Vents. All hydrogen-handling equipment shall be provided with a vent system meeting the requirements of Section 3.11.

3.13.4 Materials. Pressure-containing components within hydrogen systems shall be selected for a minimum hydrogen embrittlement susceptibility. Type 304, 316, CF8, and CF8M stainless steels are preferred materials of construction. Materials that should be avoided include, but are not limited to, titanium, maraging steels, 400-series stainless steels, MIL-S-16216, ASTM A514, ASTM A517, and the steels listed in Section 2.3 of MIL-HDBK-5, and precipitation hardening stainless steels. Materials acceptable for use in hydrogen systems are listed in KSC drawing 79K11948.

3.13.5 Hazardproofing. All equipment used in hydrogen systems shall meet the hazardproofing requirements of Section 3.16.

3.14 Hypergolic Systems.

3.14.1 Hypergol Propellant Interface. Pneumatic systems interfacing with hypergol propellant systems shall comply with the requirements specified herein. In the event of conflict with other requirements in this document, the following requirements shall govern.

3.14.2 Minimum Design Constraints. The minimum acceptable design constraints for controlling hypergolic propellant (liquid and/or vapor) migration into an associated pneumatic system are as follows:

a. Each pneumatic branch line that interfaces with a hypergolic propellant system shall have a hand-operated shutoff valve upstream of a spring-loaded poppet-type check valve to permit positive shutoff of the pneumatic supply and prevent backflow through the branch (see Figure 5 & 6).

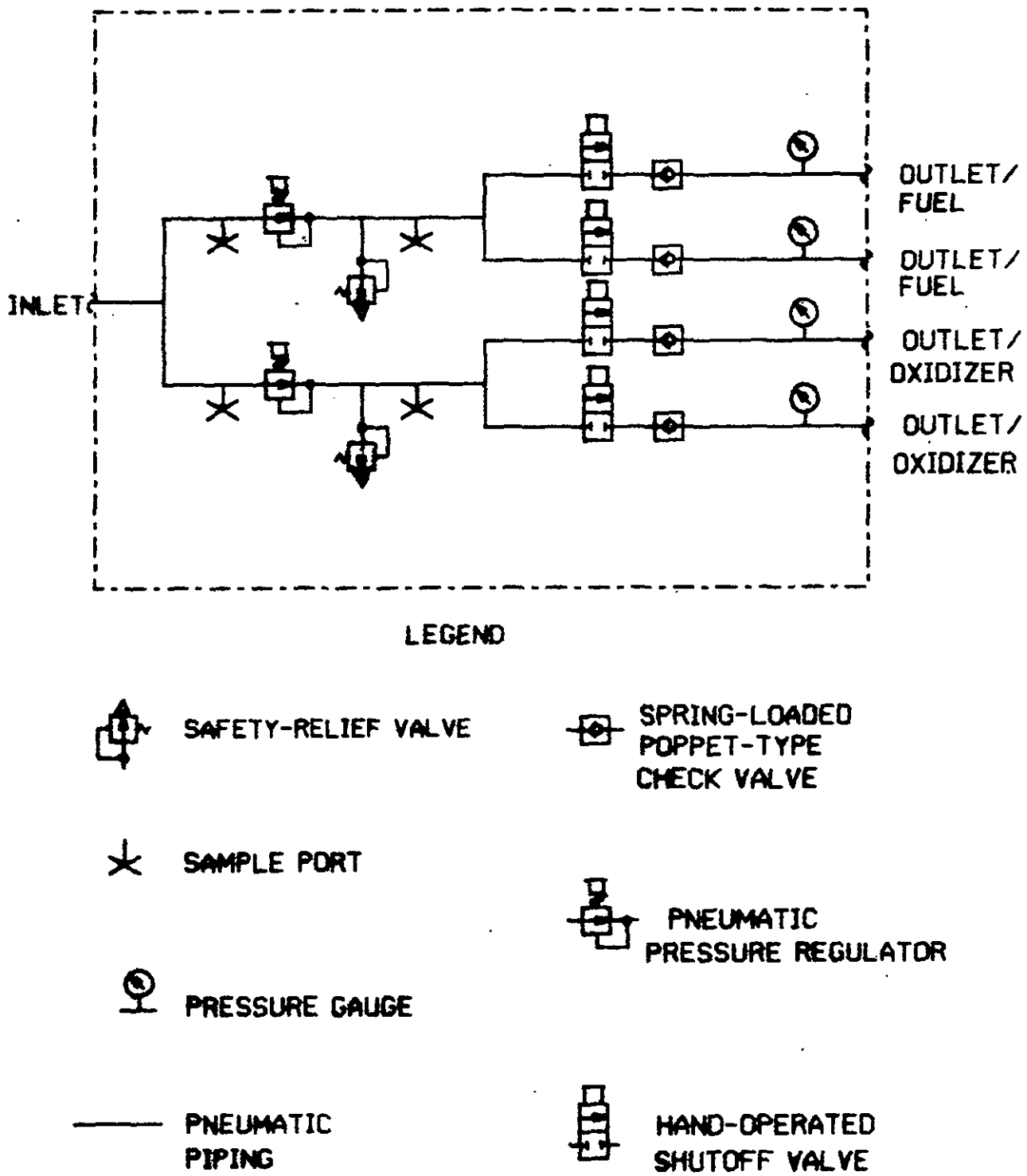

FIGURE 5. MINIMUM PNEUMATIC/HYPERGOL DESIGN CONSTRAINTS CIRCUIT

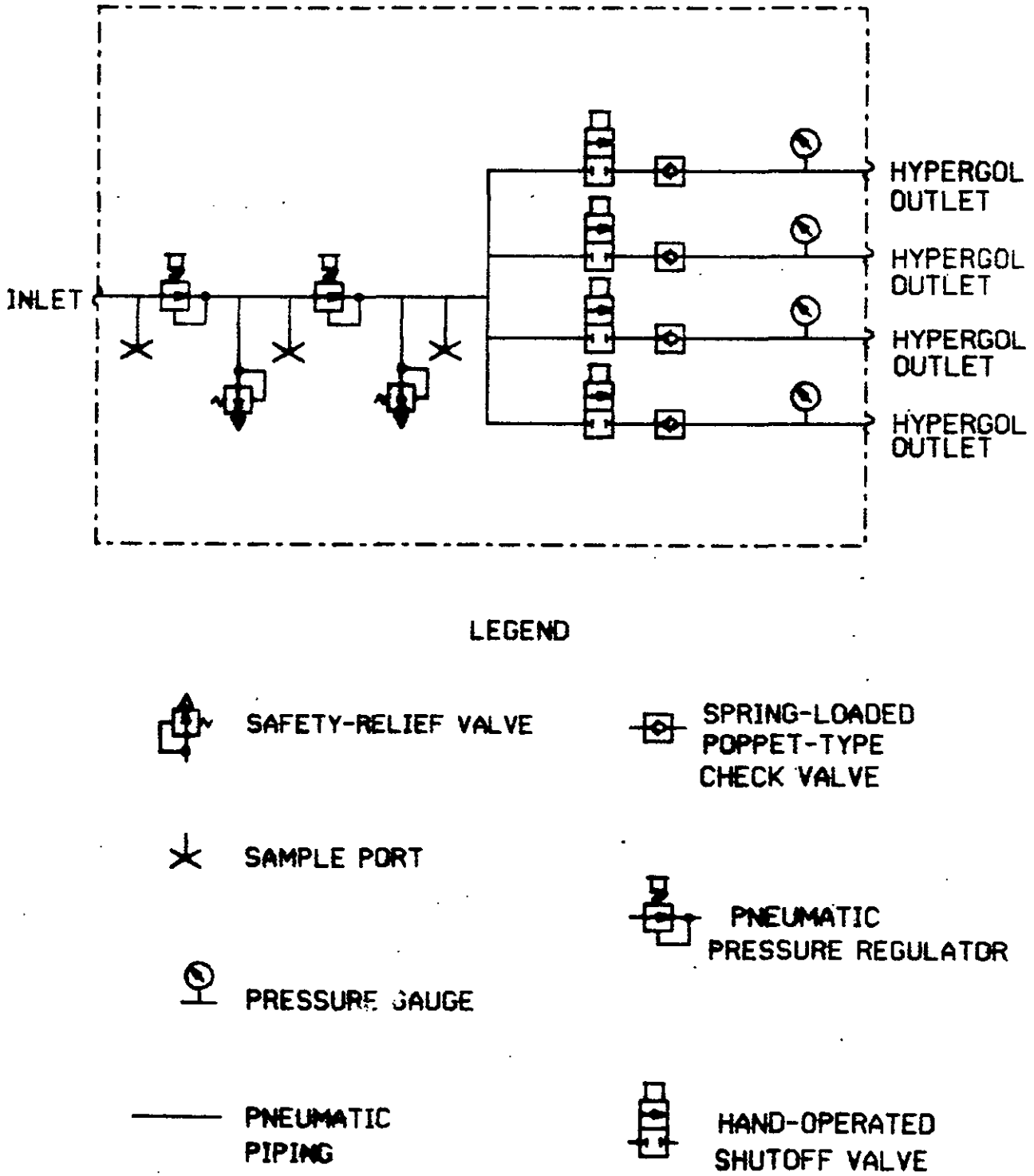

FIGURE 6. OPTIMUM PNEUMATIC/HYPERGOL DESIGN CONSTRAINTS CIRCUIT

b. Each pneumatic branch line that interfaces with a hypergolic propellant system shall be downstream of a pneumatic supply pressure regulator which serves only those branches which interface with one type of hypergolic propellant (i.e. fuel or oxidizer)(see Figure 5 & 6).

c. A sampling port (pressure gage test port may be used) shall be provided upstream and downstream of each regulator referred to in Para. 3.14.2.b to permit periodic sampling and analysis of the pneumatic medium for hypergol contamination (see Figure 5 & 6) and comply with paragraph 3.20.2.4 and Figure 7.

d. A single pressure gage shall be provided at some point downstream (either in the pneumatic system or the hypergol system) of each check valve referred to in Para. 3.14.2.a to indicate the pressure in the hypergolic propellant system (see Figure 5 & 6). Gage calibration ports shall be designed to limit potential contaminated gas impingment on personnel.

e. The pneumatic system, downstream of the pneumatic pressure regulator shown in Figure 5, shall be constructed of materials that are compatible per 79K11948 with all of the hypergolic propellants served by the pneumatic supply.

f. The pneumatic system, downstream of the pneumatic pressure regulator shown in Figure 5 & 6, shall be color-coded as a hypergolic system.

3.14.3 <u>Optimum Design Constraints.</u> The optimum design for pneumatic systems that interface with hypergolic propellants systems shall include all the minimum design constraints and the following:

a. Each hypergolic propellant system (MMH, UDMH, N_2O_4 etc.) shall have a separate pneumatic system with pressure vessel pneumatic supply serving only one propellant (See Figure 5).

b. The pneumatic system shall be constructed throughout of materials that are compatible per 79K11948 with the hypergolic propellant involved.

c. At least two stages of pneumatic pressure regulation (at least two pressure regulators) shall be provided upstream of the hand valve referred to in Para. 3.14.2.a(see Figure 6).

3.14.4 Hypergol Migration Control. The constraints in Para. 3.14.2 and Para. 3.14.3 relate exclusively to the control of a migration of hypergols (liquid and gas) and therefore do not constitute a complete design concept. Additional requirements for regulation circuits are contained in Section 3.10 and for sampling circuits see Paragraph 3.20.2.4 and Figure 7. A pneumatic system that meets or exceeds the minimum requirements of Para. 3.14.2 but does not meet the optimum requirements of Para. 3.14.3 shall be manually operated.

3.15 Electrical Design. All electrical design shall be in accordance with KSC-E-165 and KSC-STD-E-0004.

3.16 Hazardproofing.

3.16.1 Electrically Energized Equipment. Pneumatic GSE containing electrically energized devices shall be designed and constructed in accordance with KSC-STD-E-0002 and NFPA 70.

3.16.2 Bonding and Grounding. All pneumatic GSE shall be bonded and grounded in accordance with KSC-STD-E-0012.

3.16.3 Lightning Protection. Protection against damage from lightning shall be in accordance with KSC-STD-E-0013.

3.17 Environmental Protection.

3.17.1 Design Requirements. Mechanical equipment shall be designed to withstand indefinite exposure to the KSC environment without being enveloped in an enclosure or cabinet that requires active protective measures such as desiccants, dry purges, or heaters to combat the accumulation of moisture. Such equipment shall be carefully designed to eliminate water traps and to ensure free ventilation. If accessibility of equipment must be limited for safety reasons, equipment closures shall be designed of wire mesh or expanded metal screen.

3.17.2 Limitations. GSE that requires hazardproofing in accordance with Section 3.16 or that cannot withstand exposure to the environment may be protected by a special enclosure or housing equipped with a flow-through, positive-internal-pressure purge in accordance with KSC-STD-E-0002 and KSC-E-165. Components which require an atmospheric reference pressure (some types of pressure

transducers, pressure controllers, etc.) shall not be installed in positive internal pressure enclosures unless some means of furnishing the atmospheric reference pressure is provided. Special environmental protective enclosures designed to maintain static positive internal pressure are not recommended and must be approved by the KSC Engineering Development Directorate.

3.17.3 Launch Environment. The space-vehicle-induced launch environment will include severe acoustic and mechanical vibration, impingement of engine exhaust, SRB acid generating fallout, radiant heat, and rapid localized changes of atmospheric pressure. The designer shall evaluate equipment-enclosures designs for performance in the launch environment specified in KSC-GP-1059 Vol I and II or design criteria defined for other launch sites.

3.17.4 Corrosion Protection. Pneumatic GSE shall be protected from deterioration in accordance with KSC-STD-C-0001.

3.18 Calibration and Checkout.

3.18.1 Requirements. Pneumatic GSE shall be designed for in-place calibration, verification of operation, checkout, and troubleshooting of pressure and temperature gages, pressure and temperature switches, transducers, hand loaded and dome-loaded regulator circuits, check valves, and safety-relief valves, utilizing portable test equipment if required. The limits of acceptable performance of these devices shall be stated in the system Operating and Maintenance Requirements Specification Document (OMRSD) or other operating and maintenance documentation.

3.18.2 Test Connections. Each pressure gage, pressure switch, and pressure transducer shall be provided with an isolation valve and a test connection (test port) between the isolation valve and the pressure-actuated device. Whenever possible, pressure gages, pressure switches, and pressure transducers sensing the same pressure shall be manifolded together and shall be provided with a common isolation valve, test connection (test port), and a vent valve between the isolation valve and the pressure-actuated devices. Each dome-loading regulator dome-loading circuit shall be provided with a test connection (test port) and a vent valve downstream of the loading regulator (see Figures 1 through 4). The test connection (test port) shall be either a capped bulkhead fitting (KC150C4 and KC124C4) or a plugged 1/4-inch superpressure bulkhead coupling assembly (KC169) as dictated by pressure requirements. The volume communicating with the test connection (test port) between the isolation valve and the pressure-actuated device shall not exceed 1.5 cubic inches, except when a vent valve is provided between the isolation valve and the pressure-

actuated device. Venting of 1.5 cubic inches is allowed by slowly loosening the cap or plug, provided the isolation valve is closed.

3.19 Standard Parts.

3.19.1 Parts Selection/Standardization. Parts selected shall be in accordance with DE-PD-5320.1. Standardization of hardware items used in pneumatic GSE shall be applied to the system level as a minimum. The design agency responsible for overall system design shall create and maintain an overall parts list for the system. This parts list shall list each part, its quantity, and identify its points of installation. Designers shall be required to use the same parts in all similar applications unless engineering reasons justify a special item. Every effort shall be made to minimize the number of individual items in the overall parts list.

3.19.2 Elastomeric Parts. Age control of all elastomeric parts and seals shall be in accordance with KSC-SPEC-Z-0019 for all systems considered to be critical to normal operations. All O-Ring seals shall be identified by applicable military-standard part numbers or by AS 568 dash number, composition, and performance specification.

3.20 Cleanliness.

3.20.1 Requirements. All surfaces that contact the system fluid media in pneumatic GSE shall be cleaned to KSC-C-123 requirements, as specified in the specific system design criteria. The standard cleanliness level for pneumatic systems is Level 300A. Where this level disagrees with Level II Program cleanliness requirements, the higher level of cleanliness shall be applied.

3.20.2 Design Considerations.

3.20.2.1 General. Cleaning of GSE to KSC-C-123 level requirements will usually involve complete disassembly of the equipment; subjecting the parts to a stepwise cleaning process involving detergents, solvents, acids, alkalis, and drying at elevated temperature and vacuum; and final cleaning and reassembly in a specially controlled environment. It is strongly recommended that pneumatic GSE be fabricated in a commercially clean condition, be matchmarked, and then be disassembled for final cleaning. ("Matchmarked" connotes unique physical identification of adjacent separable parts to aid in reassembly of those parts. In any case in which a physical mark might damage the parts, procedural controls to ensure correct reassembly shall be used instead of physical marking.) Equipment designed to be cleaned or

recleaned in place, without significant disassembly, shall be provided with high point bleeds and low point drains to facilitate introduction and removal of cleaning media. Documentation of equipment designed for in-place cleaning shall state this fact.

3.20.2.2 Components. Components such as valves and regulators shall be cleaned per KSC-C-123. The cleanliness level shall be as required by the system design criteria. Installation procedures shall require that items connecting to the cleaned component be at least equally as clean when the connection is made. Assemblies having multiple external crevices, such as wirebraid reinforced hoses and expansion joints, shall not be immersion cleaned.

3.20.2.3 Shipping and Storage. Maintenance of internal cleanliness between the time of fabrication and final installation at KSC is of the utmost importance. Closures must provide protection against intrusion of atmospheric moisture and dust. It is strongly recommended that pneumatic GSE assemblies be maintained under positive internal pressure until installed. If not pressurized, individual components or tube/pipe assemblies shall comply with the protection requirements of KSC-C-123. When positive internal pressure is used to maintain cleanliness, pressure-measuring devices and instructions shall be provided to facilitate verification of the condition of the GSE. Verification instructions shall include temperature-compensation information, identity of the pressurant, and cautionary information as required.

3.20.2.4 Fluid Sampling. When required by the design criteria, pneumatic GSE shall be provided with a fluid-sampling port conforming to Para. 3.18.2 and communicating with the flow line from which the fluid sample is required; the port shall be located downstream of the last component in the line or as otherwise directed in the design criteria. The sample container shall be portable and shall be designed in accordance with DOT 49 CFR for the pressure and service fluid in the GSE being sampled and shall be provided with an isolation valve at each end including a relief device as a minimum. Further requirements for sampling container configurations shall be the responsibility of the O&M organization. See Figure 7 for desired configurations of fluid sampling ports.

3.21 Supports.

3.21.1 Piping. All piping supports, anchors, hangers, etc., shall conform to the requirements of ANSI B31.3 Paragraph 321 except as specified herein.

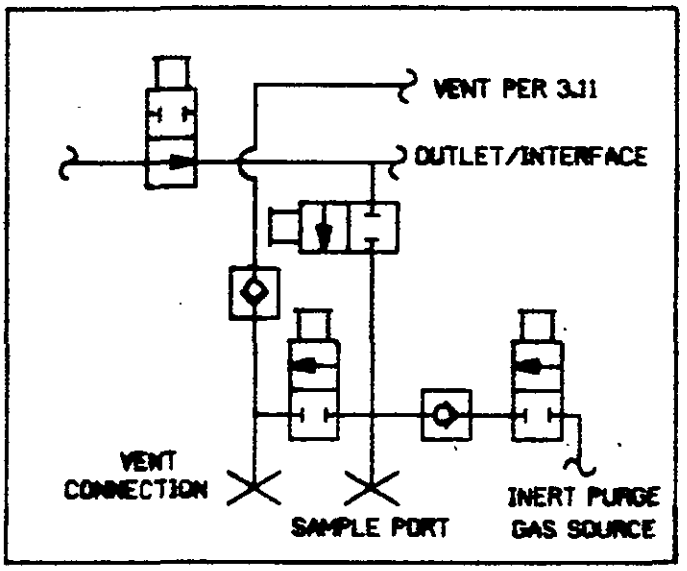

HAZARDOUS OR TOXIC FLUID SYSTEM SAMPLING CONFIGURATION

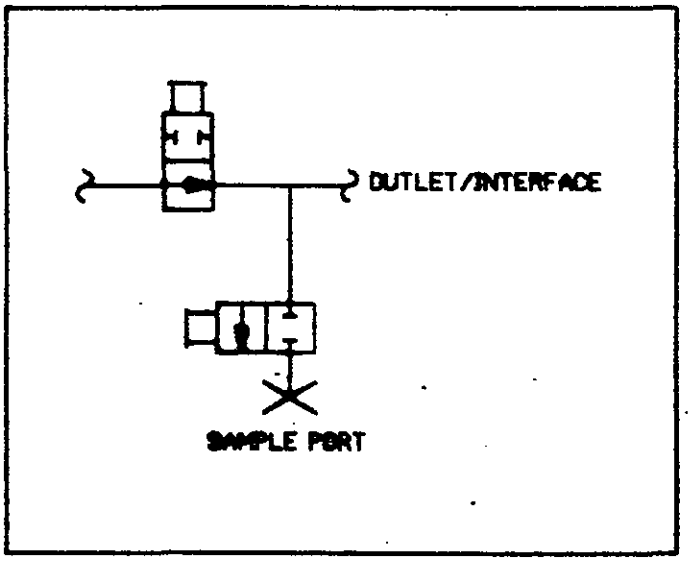

NONHAZARDOUS OR NONTOXIC FLUID SYSTEM SAMPLING CONFIGURATION

LEGEND

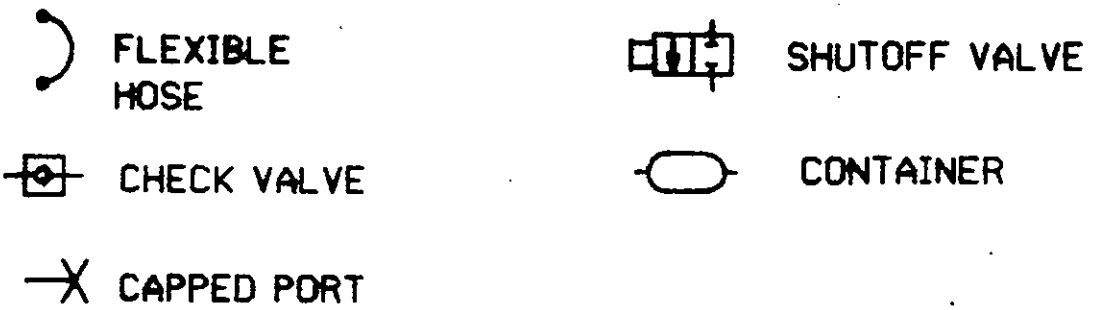

FIGURE 7. FLUID SAMPLING

3.21.2 Tubing. Flared-tubing supports shall conform to KSC-SPEC-Z-0008. In environmentally protected applications supports and mounting hardware should be of the Unistrut type or equivalent. Where the environment is highly corrosive from salt spray or launch exhaust deposits, Unistrut type supports may not be suitable due to the difficulty of maintaining corrosion control procedures defined by KSC-STD-C-0001 (See Para. 3.17.4). Design of supports for these areas may use common structural shapes or other forms of support suited to corrosion control.

3.21.3 Welding. Welding of pipe and tube supports shall be in accordance with KSC-SPEC-Z-0004.

3.21.4 Dissimilar Metals. All supports shall be designed to include protection from galvanic corrosion due to dissimilar piping/tubing and support materials.

3.22 Allowable Stress (Safety Factors), Hydrostatic and Pneumatic (Proof) Test.

3.22.1 Allowable Stress. "Safety Factor" is commonly used to describe the ratio of burst pressure to working pressure or as the ultimate tensile stress to maximum allowable stress of the material. However, the term "Safety Factor" is not used in the ANSI/ASME codes and use of the term should be discouraged except for components which cannot be designed per ANSI/ASME piping/pressure vessel codes (wire braid reinforced hoses for example). Appropriate "Safety Factors" have been factored into the ANSI/ASME codes by specifying maximum allowable stress values for all approved piping/pressure vessel materials. Unless otherwise specified herein, the design of all pneumatic system tubing, piping, and other pressurized components shall be based on the maximum allowable stress values specified in ANSI B31.3 and ASME Code, Section VIII, Division 1 or Division 2 as applicable.

3.22.2 Hydrostatic/Pneumatic Test. "Proof Test" is commonly used to describe a hydrostatic or pneumatic structural integrity test of a fluid system. However, the term "Proof Test" as defined in the ANSI/ASME codes is a destructive yield or rupture test and the term should be discouraged in favor of the terms "hydrostatic test" or "pneumatic test". Test requirements for pressure vessels are defined in Paragraph 3.6.1. All other pressurized parts (except pressure gages) prior to installation shall be hydrostatically tested to a minimum of 1-1/2 times the design pressure or pneumatically tested to 110% of the design pressure, inspected, and certified that no distortion, damage, or leakage exists. For cases where the design temperature exceeds the test temperature, the minimum test pressure shall be determined per ANSI/ASME B31.3 paragraph 345.4.2. Hydrostatic or Pneumatic Test

certification shall be provided with all procured items such as hoses, valves, and regulators, etc. Piping and tubing shall be tested as individual lengths or fabricated assemblies and shall be identified per 3.1.5. Tubing Hydrostatic Test requirements are specified in KSC-SPEC-Z-0008. When system modifications are required only the modified portion shall require hydrostatic test.

3.23 Leakage. All pneumatic system mechanical connections, gasketed joints, seals, etc. shall be leak tested at the maximum system working pressure with the system fluid media except that for hazardous gas systems a system-compatible non-hazardous gas may be used which has a density as near as possible to the system fluid (i.e. helium should be used to leak test a gaseous hydrogen system). As a minimum, all test points shall be bubble tight for a minimum of one minute when leak test solution is applied. Leak tests shall be performed with leak test solution conforming to MIL-L-25567 Type I or MSFC-SPEC-384. All surfaces shall be thoroughly rinsed clean of test solution immediately upon completion of leak testing. Whenever practical, deionized water shall be used as the rinsing agent. Alternate methods of leak testing such as the use of mass spectrometers may be specified when required. Bubble tight is defined to be equal to or less than 1×10^{-4} cubic centimeters per second at Standard Temperature and Pressure.

3.24 Panel Marking/Identification.

3.24.1 Components. Each mechanical and electromechanical component and interface connection within panels shall be assigned a unique identification on the engineering drawing in accordance with KSC-GP-435, Vol I.

3.24.2 Flow Diagram. A black film stripe 1/8-inch wide representing the component interconnecting lines shall be applied to the front of each pneumatic panel running from component to component where they protrude through the panel. The location of components on side panels not visible to an operator is prohibited. Components not visible from the operator's position shall be represented in the striped line by appropriate schematic symbol. Preprinted symbol labels per 79K05922, which conform to the preferred schematic symbols in KSC-STD-152-2,shall be used for this purpose.

3.24.3 Title. Each pneumatic panel shall be provided with a functionally descriptive title that includes, as a minimum, service media and working pressures. This title shall be assigned by the design documentation and shall be prominently displayed on the panel front. In addition, each mechanical and electro-

mechanical component and interface connection shall be identified on the panel front, and components shall be identified from the back of the panel by means of the unique identifier required by Para. 3.24.1. This identifier shall be ink stamped or stenciled on the mounting structure as near the component as possible; the identifier shall be visible when the component is installed. Where this practice is not feasible, a "dog tag" (Reference Paragraph 3.1.5) may be used. All pneumatic-panel identification marking shall be in accordance with KSC-STD-E-0015.

3.25 Multiple-Fluid Systems.

3.25.1 Definition. A "multiple-fluid" system is an item of GSE that utilizes different fluids in a planned sequence.

3.25.2 Requirements. The design of a multiple-fluid system must ensure that accidental contamination (cross connection) of one or more of the inlet supplies by another cannot occur. A sequenced operating procedure is not sufficient to satisfy this requirement (See Section 3.14).

3.25.3 Design. As a minimum each fluid supply to a multiple-fluid system shall terminate with an isolation valve followed by a check valve and shall have a vent valve installed between the isolation valve and check valve. Operating procedures shall require closing of the isolation valve and opening of the vent valve in the active supply before closing the vent valve and opening the isolation valve of another supply. Optimum design shall include the physical separation of potential cross contamination fluids by the removal of tubing, piping or hoses assemblies.

3.26 Temperature-Conditioned Fluids.

3.26.1 Definition. A "temperature-conditioned fluid" is a fluid that must be delivered at a temperature that will not result from flow processes and interaction of the equipment with the ambient conditions.

3.26.2 Requirements. The designer shall assess the operations of each GSE system for proper function at the extremes of the ambient conditions defined in KSC-DE-512-SM to determine if temperature conditioning is required. Whenever temperature conditioning is required, particular attention shall be paid to the actual location of GSE relative to the delivery interface to prevent the imposition of unreasonable performance requirements on the transfer piping. The required temperatures and their tolerances shall be shown on the mechanical or electromechanical schematic at appropriate locations in all systems for which

temperature conditioning is required.

3.27 Safety and Reliability.

3.27.1 System Assurance Analysis. System assurance analysis (Hazard Analysis and Failure Mode and Effects Analysis) shall be performed on all fluid system designs in accordance with instructions in KSC-DE-P-360 and applicable program requirements.

3.28 Maintainability. Maintainability criteria for fluid system design shall be in compliance with KSC-SR73-1020. Maintainability analysis shall be performed on all fluid systems designs in accordance with KSC-DE-SM-512 and applicable program requirements.

4. QUALITY ASSURANCE PROVISIONS

4.1 Design and Development Controls. The designer shall ensure that the following are specified as required to assure quality and to fulfill the design intent:

a. Inspection and test criteria (including specific nondestruct-test methods, test equipment, environmental conditions, and sample size)

b. Identification; and design history and fabrication record retrieval requirements

c. Identification of critical hardware characteristics necessary for procurement and fabrication

d. Performance and tolerance limits

e. Applicable process specifications for cleanliness and contamination control

f. Applicable process specifications, standards, and procedures

g. Limited life requirements

h. Acceptance and rejection criteria

i. Handling, storage, preservation, marking, labeling, packaging, packing, and shipping requirements

j. Acceptance Data Package (ADP) requirements in accordance with JSC SN-D-0007, where applicable.

4.2 Contractual Requirements. When this standard is invoked in a contract, the statement of work shall invoke the applicable provision of NHB 5300.4(1D-2) and NHB 5300.4(1C).

4.3 Acceptance Test Requirements and Certifications. As a minimum for acceptance of all systems, leak and functional tests shall be performed prior to acceptance. Certifications shall be provided by the contractor for cleaning, leak and functional tests, and compliance with all design requirements. Full design flow tests are not required.

5. PREPARATION FOR DELIVERY

5.1 Packaging, Handling, and Transportation. The packaging, handling, and transportation of pneumatic GSE system elements shall be in accordance with KSC-DE-512-SM, Section 6.10. Packaging, handling, and transportation requirements specific to certain GSE shall become part of the detailed specification for the individual element.

5.2 Marking for Shipment. All containers shall be marked in accordance with KSC-DE-512-SM, Section 6.11.

6. NOTES

6.1 Intended Use. This standard defines the requirements for the design of pneumatic GSE and does not constitute a specification for the procurement, fabrication, or installation of the systems or elements.

Notice. - When Government drawings, specifications, or other data are used for any purpose other than in connection with a definitely related Government procurement operation, the United States Government thereby incurs no responsibility nor any obligation whatsoever, and the fact that the Government may have formulated, furnished, or in any way supplied the said drawings, specifications, or other data is not to be regarded by implication or otherwise as in any manner licensing the holder or any other person or corporation, or conveying any rights or permission to manufacture, use, or sell any patented invention that may in any way be related thereto.

Custodian:

NASA-John F. Kennedy Space Center
Kennedy Space Center, FL 32899

Preparing Activity:

John F. Kennedy Space Center
Mechanical Engineering Div.
Director of
Engineering Development