INCH-POUND

MIL-PRF-26536E
24 Sep 1997
Superseding
MIL-P-26536D
27 July 1987

PERFORMANCE SPECIFICATION
PROPELLANT, HYDRAZINE

This specification is approved for use by all
Departments and Agencies of the Department of Defense

1. SCOPE

1.1 Scope. This specification covers the requirements for three grades of hydrazine (N_2H_4).

1.2 Classification. Hydrazine will be of the following designated grades as specified (6.2).

GRADES

Standard	- Normal production and quality control, suitable for most uses.
Monopropellant	- Normal product with strict control of specified impurities. To be specified only for monopropellant catalytic engines where extended life is a requirement.
High Purity	- Special production with strict control of specified impurities.

2. APPLICABLE DOCUMENTS

2.1 General. The documents listed in this section are specified in sections 3 and 4 of this specification. This section does not include documents in other sections of this specification or recommended for additional information or as examples. While every effort has been made to ensure the completeness of this list, document users are cautioned that they must meet all specified requirements documents cited in sections 3 and 4 of this specification, whether or not they are listed.

2.2 Government documents.

Beneficial comments (recommendations, additions, deletions) and any pertinent data which may be of use in improving this document should be addressed to: Code (68) SA-ALC/SFSP, 1014 Billy Mitchell Blvd/STE 1, Kelly AFB TX 78241-5603, by using the standardization Document Improvement Proposal (DD Form 1426) appearing at the end of this document or by letter.

AMSC N/A FSC 9135

DISTRIBUTION STATEMENT A. Approved for public release; distribution is unlimited.

2.2.1 Specifications, standards, and handbooks. The following specifications form a part of this document to the extent specified herein. Unless otherwise specified, the issues of these documents are those listed in the issue of the Department of Defense Index of Specifications and Standards (DoDISS) and supplement thereto, cited in the solicitation (see 6.2).

SPECIFICATIONS

DEPARTMENT OF DEFENSE

MIL-PRF-25604 - Propellant, uns-Dimethylhydrazine
MIL-PRF-27401 - Propellant Pressurizing Agent, Nitrogen
MIL-PRF-27404 - Propellant, Monomethylhydrazine
MIL-PRF-27407 - Propellant Pressurizing Agent, Helium

(Unless otherwise indicated, copies of the above specifications, and standards are available from the Standardization Document Order Desk, 700 Robbins Avenue, Building 4D, Philadelphia PA 19111-5094).

2.3 Non-Government publications. The following documents form a part of this document to the extent specified herein. Unless otherwise specified, the issues of the documents which are DoD adopted are those listed in the issue of the DoDISS cited in the solicitation. Unless otherwise specified, the issues of documents not listed in the DoDISS are the issues of the documents cited in the solicitation (see 6.2).

AMERICAN SOCIETY FOR TESTING AND MATERIALS (ASTM)

ASTM D 1193 - Specification for Reagent Water
ASTM D 2276 - Test Method for Particulate Contaminant in Aviation Fuel by Line Sampling
ASTM E 29 - Practice for Using Significant Digits in Test Data to Determine Conformance with Specifications

(Application for copies should be addressed to the American Society for Testing and Materials, 100 Barr Harbor Drive, West Conshohocken PA 19428-2959.)

2.4 Order of precedence. In the event of a conflict between the text of this document and the references cited herein, the text of this document takes precedence. Nothing in this document, however, supersedes applicable laws and regulations unless a specific exemption has been obtained.

3. REQUIREMENTS

3.1 Chemical and physical properties. The chemical and physical properties of the propellant shall conform to those listed in Table I when tested in accordance with the applicable test methods.

3.2 Limiting values. The following applies to all specified limits in this specification: For purposes of determining conformance with these requirements, an observed value or a calculated value shall be rounded off "to the nearest unit" in the last right-hand digit used in expressing the specification limit according to the rounding-off method of ASTM Practice E 29 for using Significant Digits in Test Data to Determine Conformance with Specifications.

3.3 Filter.

3.3.1 Standard grade. A filter with a 10-micrometer nominal and 40-micrometer absolute rating shall be installed between the manufacturer's plant system and the container to be filled for delivery.

3.3.2 Monopropellant and high purity grades. A filter with a 2-micrometer nominal and 10-micrometer absolute rating shall be installed between the manufacturer's plant system and the container to be filled for delivery.

3.4 Qualitative. The propellant shall be colorless, homogeneous liquid when examined visually by transmitted light.

TABLE I. Chemical and physical properties.

Properties	Limits			
	Standard grade	Monopropellant grade	High purity grade	Test paragraph
Hydrazine (% by wt)	98 min	98.5 min	99.0 min	4.3.2
Water (% by wt)	1.5 max	1.0 max	0.5 - 1.0	4.3.2
Ammonia (% by wt)	---	---	0.3 max	4.3.2
Particulate (mg/L)	10 max	1.0 max	1.0 max	4.3.3
Chloride (% by wt)	---	0.0005 max	0.0005 max	4.3.4
Aniline (% by wt)	---	0.50 max	0.003 max	4.3.5
Iron (% by wt)	---	0.002 max	0.0004 max	4.3.6
Nonvolatile residue (% by wt)	---	0.005 max	0.001 max	4.3.7
Carbon dioxide (% by wt)	---	0.003 max	0.003 max	4.3.8
Other volatile carbonaceous material (Total as MMH & UDMH, Alcohol, % by wt)	---	0.02 max	0.005 max	4.3.9

4. VERIFICATION

4.1 Classification of inspections. The inspections shall be classified as quality conformance inspections.

4.2 Quality conformance inspection. The quality conformance inspection shall consist of the following:

a. Individual tests 4.2.1

b. Sampling tests 4.2.2

4.2.1 Individual tests. The propellant shall be subjected to the following test as described under 4.3:

Examination of product 4.3.1

4.2.2 Sampling tests. The propellant shall be selected according to 4.2.2.1 and subjected to the tests indicated in Table I as described under 4.3.

4.2.2.1 Sampling plan. Unless otherwise specified (6.2), each filled shipping container shall be considered a lot and shall be sampled.

4.2.2.1.2 Sample. A sample consists of not less than 600 mL of propellant when tested to standard grade requirements and not less than 1500 mL when tested to monopropellant and high purity grade requirements. Unless otherwise specified, quality conformance tests shall be made on the sample of propellant taken directly from the shipping container. When required, the sample shall be forwarded to a laboratory designated by the procuring activity for subjection to the quality conformance tests specified herein. The bottle intended for sampling shall be specially cleaned and handled according to the procedure described in 4.3.3. Sampling shall be conducted in such a manner that atmospheric exposure of the contents of the shipping container and the sample is minimized.

4.2.3 Rejection. When any sample of the propellant tested in accordance with 4.3 fails to conform to the requirements specified herein, the entire lot represented by the sample shall be rejected.

4.3 Test methods.

4.3.1 Examination of product. The propellant shall be visually examined while performing test specified in 4.3.3 to determine compliance with the requirement as specified herein. Examination to ensure that the material conforms to 3.4 shall be conducted after the sample has been transferred to the 500 mL calibrated cylinder for standard grade or to a 1000 mL graduated cylinder for monopropellant and high purity grades.

4.3.2 Hydrazine assay and water. The propellant and water content of the sample shall be determined by the following method.

4.3.2.1 Gas chromatographic method.

4.3.2.1.1 Assay column preparation. Cap one end of a 1/8 inch OD by 6-foot nickel tube and fill the tube with the Tenax GC column packing by pouring through a small funnel attached to the other end. Tap or mechanically vibrate the tube to ensure uniform packing. When the tube is filled, plug both ends with a small wad of glass wool, bend the column to the configuration required by the column oven, and connect the column to the inlet fitting in the oven. Condition the column with carrier gas flowing and the oven set at 200°C for one hour. After conditioning the column, connect the other end to the detector and set the carrier gas flow to approximately 25 mL/min, and the column oven to 50°C. The inlet and detector temperatures, if separately heated, shall be set to 100°C and 150°C, respectively. The detector current should be set to a nominal sensitivity value recommended for helium by the instrument manufacturer. The column temperature and carrier gas flow may be

adjusted by the analyst to provide adequate component resolution for minimum analysis time.

4.3.2.1.2 Analysis. Equilibrate the column with propellant by injection of two or more 5 µL samples into the inlet. If more than 30 minutes elapse between analysis, a single 5 µL injection of propellant should re-equilibrate the column. Inject 1 - 2 µL of propellant for analysis and record the areas of all peaks in the chromatogram, using the following time/temperature program:

He carrier gas flow	20 - 25 mL/min
Initial temperature	50°C
Rate	2°C/min
Final temperature	155°C
Final time hold	4 min

Each analysis should require less than 20 minutes for elution of all components. The elution order of possible sample components is as follows:

Air, ammonia, methylamine, water, and hydrazine.

4.3.2.1.3 Calculations.

$$\%N_2H_4 = \frac{A_{N_2H_4} \times 100}{\sum A_i}$$

$$\%H_2O = \frac{A_{H_2O} \times 100}{\sum A_i}$$

$$\%NH_3 = \frac{A_{NH_3} \times 100}{\sum A_i}$$ for high purity grade only

where

$A_{N_2H_4}$ = The measured area of the N_2H_4 peak multiplied by its signal attenuation factor.

A_{H_2O} = The measured area of the H_2O peak multiplied by its signal attenuation factor.

A_{NH_3} = The measured area of the NH_3 peak multiplied by its signal attenuation factors.

$\sum A_i$ = The sum of all the measured peak areas times their signal attenuation factors.

NOTE: For monopropellant and high purity grades substitute $(\Sigma A_i)[100/(100-\%\text{aniline})]$ for ΣA_i to correct for the aniline content of the propellant

Assumption: The thermal conductivities of all components in the sample are equal.

4.3.2.1.4 Equipment and reagents. The following equipment and reagents shall apply as test conditions of 4.3.2.

a. Equipment:

(1) Gas chromatograph - incorporating a thermal conductivity detector.

(2) Recorder - potentiometric strip chart, 0 - 1 millivolt, 1 second FS response, with integrator.

b. Reagents:

Tenax GC 60/80 mesh, Analabs, Inc, 80 Republic North Haven CT 06473 or equivalent.

4.3.3 Particulate. The propellant sample shall be tested for contamination in accordance with ASTM D-2276, Method A, with the following exceptions:

4.3.3.1 Mix the sample thoroughly without exposure to air. Immediately pour 500 mL of the sample into a clean 500 mL graduated cylinder. Use this 500 mL of propellant for the particulate analysis of standard grade. For monopropellant and high purity grades substitute a 1000 mL graduated cylinder and use 1000 mL of propellant for the particulate analysis.

4.3.3.2 Use a solvent resistant filter disc made from such materials as Millipore, LSWP-04700 (Mitex-Teflon) or Gelman VF-6, Fluoride-Metricel), plain, white, 10±3 microns, 47 mm diameter, or equivalent, for standard grade and a Millipore FALP04700, plain, white, 1 micron, 47 mm diameter or equivalent for monopropellant and high purity grades instead of that specified in ASTM D-2276.

4.3.3.3 The drying oven temperature shall be 70°C (158°F) instead of the 90°C (194°F) specified in ASTM D-2276.

4.3.3.4 Filtered isopropyl alcohol shall be used for rinsing the sample bottle and filter holder instead of petroleum ether specified in ASTM D-2276.

4.3.4 Chloride. The chloride level shall be determined by methods based on accepted scientific (chemical) principles, such as colorimetric with mercury thiocyanate, combinations of silver nitrate and/or specific ion electrodes (Ag^+/Cl^-), or ion chromatographic techniques. In case of dispute 4.3.4.1 shall be the referee method.

4.3.4.1 Procedure. Rinse the propellant residue container in one vessel from 4.3.7 with a 5 mL portion of 1N H_2SO_4. Briefly stir and heat the liquid to boiling but do not allow the condensate to escape. Transfer the solution to a 25 mL volumetric flask. Rinse vessel with a second 5 mL portion of acid followed by one 5 mL portion of distilled water. Combine the portions in the 25 mL volumetric flask and add two to three drops of bromcresol green indicator. Dropwise titrate the contents of the flask to a green endpoint

with 1N NaOH and then dilute the the mark with distilled water. Mix the solution and transfer approximately 10 mL to a 25 mL beaker. Immerse the electrodes in the sample solution and record the millivolt reading. Compare the millivolt reading from the sample to a calibration curve prepared from chloride standards and record the chloride concentration of the sample.

4.3.4.2 Calculation. Calculate the percent chloride in the sample using the following formula:

$$\%Cl^- = \frac{(ppm\ Cl^-)(V_d)}{(V_h)(D)(1 \times 10^4)}$$

where

V_d = Final dilution volume taken from NVR residue in mL.

V_h = Volume of hydrazine used in NVR analysis in mL.

D = Density of hydrazine (1.01 g/mL).

4.3.4.3 Reagents and equipment. The following shall apply as test conditions of 4.3.4:

4.3.4.3.1 Reagents.

a. Chloride-free distilled water; the water is considered chloride-free if a 100 mL sample used to dissolve 0.1 g of silver nitrate, shows no turbidity after standing in the dark for 24 hours.

b. 1N H_2SO_4; prepare by pouring 29 mL of ACS grade concentrated H_2SO_4 into 300 mL of chloride-free water contained in a 1000 mL volumetric flask. Cool the solution to room temperature, dilute to the mark with the chloride-free distilled water, and mix thoroughly. Transfer the solution to a plastic bottle.

c. 1N NaOH; prepare by dissolving 40 g of ACS grade, low carbonate, NaOH in 300 mL of chloride-free water contained in a 1000 mL volumetric flask. Cool the solution to room temperature, dilute to the mark with the chloride-free distilled water, and mix thoroughly. Transfer the solution to a plastic bottle and protect from prolonged exposure to the atmosphere.

d. Standard sodium chloride solution, 1 mL = 1.00 mg Cl^-; Weigh 1.648 grams dry sodium chloride into a one liter volumetric flask. Dilute to the mark with distilled water. Transfer the well mixed solution to a clean polyethylene bottle for storage.

4.3.4.3.2 Equipment.

a. Chloride electrode - solid state Orion Model 94-17, or equivalent.

b. Reference electrode, double junction, Orion Model 90-02 with 1M KNO_3 outer compartment filling solution, or equivalent.

c. pH/millivolt meter - Orion Ion Analyzer Model 801, or equivalent.

4.3.5 Aniline. The aniline content of the propellant shall be determined by one of these methods. The method in 4.3.5.1 is the referee method of monopropellant grade hydrazine. The method in 4.3.5.3 is the referee method for high purity grade hydrazine.

4.3.5.1 Spectrophotometric method.

4.3.5.1.1 Procedure. Pipet or syringe 0.25 mL (250 µL) of propellant into a 25 mL volumetric flask containing approximately 15 mL of distilled water, dilute to the mark with distilled water, and mix the solution thoroughly. Fill two 1 cm pathlength silica spectrophotometer cells with distilled water and place one in each position for sample and reference cells. Using the appropriate source and detector for the spectrophotometer set the recorder pen to zero absorbance at 320 nm and scan the region between 320 nm and 240 nm. If the baseline is relatively flat then the cells and distilled water can be considered free from interfering substances. Exchange the water in the sample cell with the previously prepared sample, using several rinses with sample solution, and rescan the 320 nm to 240 nm region, first ensuring that the recorder pen is set at zero absorbance at 320 nm. Draw a baseline under the aniline peak at 280 nm, measure, and record the net absorbance of the peak. Determine the aniline content of the sample by comparing the net absorbance obtained to a calibration curve of net absorbance versus percent aniline.

4.3.5.1.2 Calibration. Pipet or syringe 0.025 mL (25 µL) of aniline into a 100 mL volumetric flask containing 50 mL of distilled water. Shake the mixture to dissolve the aniline and dilute the solution to the mark with distilled water. Mix the standard thoroughly. Transfer to separate 25 mL volumetric flasks the following volumes of the previously prepared aniline standard; 2.0 mL, 4.0 ml, 6.0 mL, and 8.0 mL. Dilute each to the mark with distilled water and mix thoroughly. The aniline concentrations are equivalent to 0.2, 0.4, 0.6, and 0,8% aniline in propellant. Determine the net absorbance of standards versus distilled water in the same manner as with the sample. Plot net absorbance versus percent aniline and draw a curve through the points. All calibration standards should be prepared fresh daily.

4.3.5.1.3 Equipment. The following shall apply as test conditions of 4.3.5.1.

4.3.5.1.3.1 Equipment. Spectrophotometer, double beam, ultra violet, narrow band width, recording, equipped with 1 cm silica cells, Cary 14 or equivalent.

4.3.5.2 Gas chromatographic method.

4.3.5.2.1 Procedure. Prepare a gas chromatographic column consisting of 9.5 g Apiezon L and 0.5 g Alltech AT-220 (formerly Amine 220) coated upon 20 g of a white, silanized diatomaceous earth support 60/80 mesh. Condition the column for four hours at 150°C prior to connection to the detector. Use a gas chromatograph equipped with a flame ionization detector. The inlet, if separately heated, should be adjusted to 130°C or greater, the column and detector temperatures should be 130°C and 150°C, respectively. After the instrument has stabilized, inject 0.5 µL of propellant and record the area of the aniline peak. Compare the area of the aniline peak with that of a calibration standard and calculate the percent aniline of the sample.

4.3.5.2.2 Calibration (monopropellant hydrazine). Pipet or syringe 0.5 mL (500 µL) of aniline into a 100 mL volumetric flask containing approximately 50 mL of distilled water, shake the mixture, dilute to the mark with distilled water, and mix the solution thoroughly. This calibration standard is equivalent to 0.5% aniline in propellant. Inject 0.5 µL of the standard into the inlet of the chromatograph and record the area of the aniline peak. Prepare the standard fresh daily.

4.3.5.2.3 Calculation. Use the following formula for calculation of the aniline content of the propellant:

$$\% \, aniline = \frac{0.5 A_s}{A_c}$$

where

A_s = Area of the sample aniline peak times its attenuation factor.

A_c = Area of the standard aniline peak times its attenuation factor.

4.3.5.2.4 Equipment. The following equipment shall apply as test conditions of 4.3.5.2.

a. Gas chromatograph, equipped with a flame ionization detector.

b. Recorder, potentiometric, with integrator, pen speed = 1 sec FS, 1 mv span.

c. Column supports and stationary phases, available from Alltech Associates, Inc, 2051 Waukegan Road, Deerfield IL 60015-1899.

4.3.5.3 Wide bore capillary method.

4.3.5.3.1 Procedure. A 0.53 mm OD × 15 meter crosslinked "Carbowax 20M" capillary column shall be used. Helium is used as the carrier gas. A gradient temperature program is used from 40°C to 130°C. Splitless injection is used. Sample size should be 0.4 to 1 µL. Condition the column with several injections of the calibration mixture 3 minutes apart. After the fifth injection, allow sufficient time for the final injection of aniline to elude, approximately 10 min. Adjust flow rate to allow for baseline separation of the trace monomethylhydrazine from hydrazine.

4.3.5.3.2 Calibration of calculation (high purity hydrazine). Pipet or syringe 0.5 mL of aniline into a 1.0 L volumetric flask containing approximately 500 mL of distilled water, and mix the solution thoroughly. Fill to the mark with distilled water and thoroughly mix. Pipet 10 mL of this solution into a 100 mL volumetric flask. This calibration standard is equivalent to 0.005% aniline in propellant. Inject 1.0 µL of the standard into the inlet of the chromatograph and record the area of the aniline peak. Use a similar calculation method described in 4.3.5.2.3 allowing for the less concentrated standard solution of 0.005%

4.3.5.3.3 Equipment. The following equipment shall apply as test conditions of 4.3.5.3.

a. Gas chromatograph, equipped with a flame ionization detector.

b. Recorder, potentiometric, with integrator, pen speed = 1 sec FS, 1 mv span.

c. Packed columns, available from Alltech Associates, Inc, 2051 Waukegan Road, Deerfield IL 60015-1899.

4.3.6 Iron. The iron content of the propellant shall be determined by one of the following methods. The method of 4.3.6.1 is the referee method.

4.3.6.1 Atomic absorption.

4.3.6.1.1 Procedure. Rinse the propellant residue contained in one vessel from 4.3.7 as follow: Add 5 mL of 5N H_2SO_4 to the vessel and place on a hotplate stirrer. Heat the mixture, while stirring, to boiling and maintain at that temperature for three to five minutes. Allow the solution to cool and transfer to a 100 mL volumetric flask. Rinse the vessel at least three times with 5 mL portions of 0.1N H_2SO_4 combining all of the rinses in the volumetric flask. Dilute to the mark with distilled water and mix thoroughly. (For atomic absorption only, hydrazine may be diluted 2:1 and used directly.) Determine the absorbance of the sample at an iron wavelength closest to 2480 Å on a suitable atomic absorption spectrophotometer, after setting the instrument to zero absorbance, with 0.1N H_2SO_4. Compare the results to a calibration curve prepared from iron standards and record the iron-concentration of the sample.

4.3.6.1.2 Calibration. Prepare a 1000 ppm iron standard by dissolving 1.00 g of iron wire or shot in 50 mL of 6N H_2SO_4. Use heat. Quantitatively transfer the resulting solution to a 1000 mL volumetric flask with 0.1N H_2SO_4 and dilute to the mark with 0.1N H_2SO_4. To four 200 mL volumetric flasks add successively 1.0, 2.0, 3.0, 5.0 mL of the iron standard, dilute each to the mark with 0.1N H_2SO_4, and mix thoroughly. The iron concentrations of these solutions are 5, 10, 15, and 25 ppm, respectively. (Commercial standard solutions may be used.) After setting the instrument to zero absorbance with 0.1 N H_2SO_4, determine the absorbance of the four calibration standards. Prepare a calibration curve of absorbance versus ppm iron.

4.3.6.1.3 Calculation. Calculate the iron content of the propellant using the following formula:

4.3.6.1.3.1 Iron from NVR residue.

$$\%Fe = \frac{(ppm\ Fe)(V_d)}{(V_h)(D)(1\times 10^4)}$$

where

V_d = Final dilution volume taken from NVR in mL.

V_h = Volume of hydrazine used in NVR analysis in mL.

D = Density of hydrazine (1.01 g/mL).

4.3.6.1.3.2 Iron from direct hydrazine analysis.

$$\%Fe = \frac{(ppm\ Fe)(DF)}{(D)(1 \times 10^4)}$$

where

DF = Dilution factor used to dilute hydrazine.

D = Density of hydrazine (1.01 g/mL).

4.3.6.1.4 Equipment. The following equipment shall apply as test conditions of 4.3.6.1.

4.3.6.1.4.1 Equipment.

a. Hotplate/stirrer - controllable heat and stir settings.

b. Atomic absorption spectrophotometer with an iron hollow cathode lamp.

4.3.6.2 Colorimetric method.

4.3.6.2.1 Procedure. Prepare the sample solution in the same manner as described in 4.3.6.1. Analyze the solution using the method described by ASTM D 1068, Method A, paragraph 12.

4.3.7 Nonvolatile residue (NVR). The nonvolatile residue of the propellant shall be determined in duplicate by either of the following methods (4.3.7.1 shall be the referee method).

4.3.7.1 Dropwise method.

4.3.7.1.1 Procedure. Clean the unassembled apparatus with detergent and rinse thoroughly with distilled water. Dry the parts in an oven at 110°C. Assemble the apparatus as shown in Figure 1. Fill the water bath with distilled water and turn on the heater. Adjust the water level of the bath to approximately one-half inch below the lowest fitting and mark this level on the bath. When the bath temperature reaches boiling adjust the nitrogen purge to approximately 2 L per minute and turn on the water aspirator. With the sample delivery valve closed, the pressure in the apparatus should be below 30 mm Hg. Open the sample delivery valve slowly to adjust the apparatus pressure to approximately 60 mm Hg. Allow the apparatus to purge for approximately five minutes to remove traces of water. Remove the water bath and dry the outside of the residue vessel with a clean lintless tissue. Disconnect the aspirator from the apparatus and remove the residue vessel using a tissue to hold the vessel. Wipe the outside of the vessel carefully and place it near the analytical balance. After at least twenty minutes, accurately weigh the residue vessel. Record the weight. Reassemble the apparatus and close the sample delivery valve. Replace the water bath, adjust the water level to the mark, heat the water to boiling. Transfer 100 mL of propellant to the apparatus using a 100 mL volumetric pipet. With the nitrogen purge in place, turn on the water aspirator and reduce the apparatus pressure to less than 30 mm Hg. Slowly open the sample delivery valve to admit propellant to the residue vessel and adjust the flow such that the apparatus pressure does not exceed 60 mm Hg (ca 2 drops per second). The quantity of propellant in the

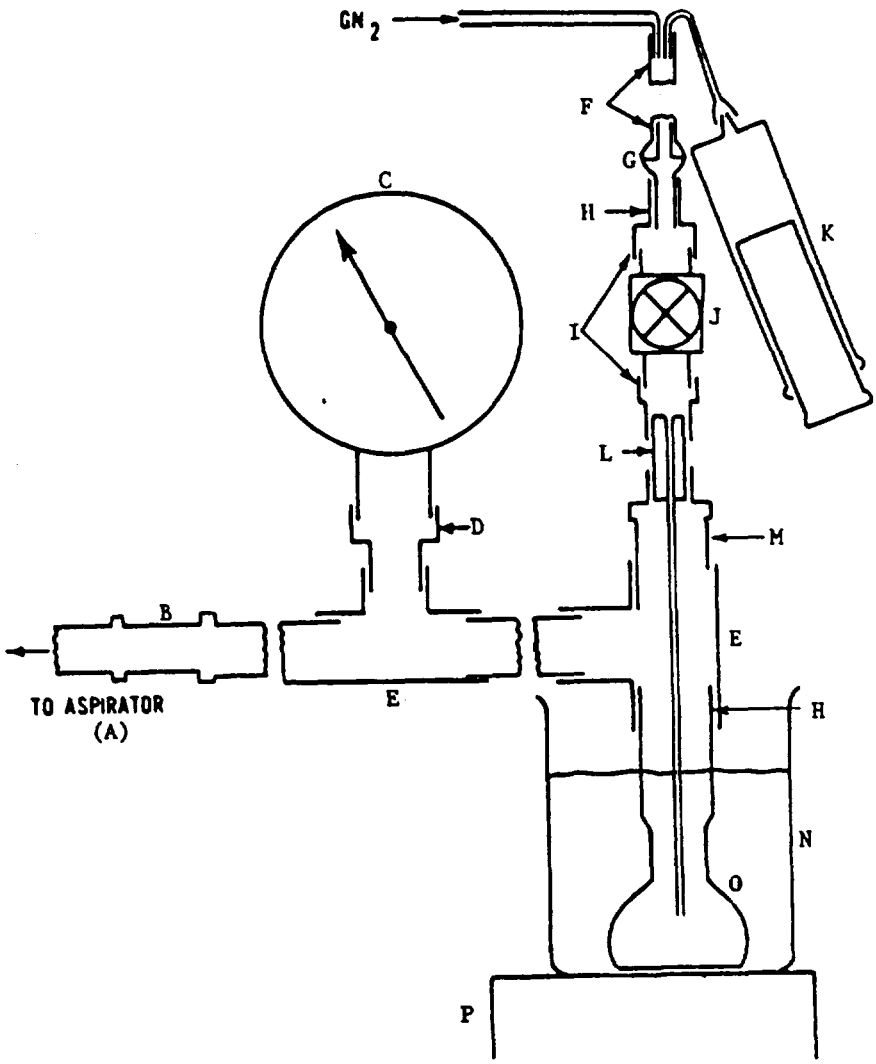

A - Water aspirator (glass or polyethylene)
B - Connector (polyethylene, separable, Sargent Cat No S-73788, or equivalent)
C - Gauge (absolute pressure, 0 - 760 mm range, stainless steel, Matheson Gas Co model no 63-5601, or equivalent)
D - Adapter, SS-811-A4F
E - Union Tee, SS-810-3 (2 each)
F - Pipet (volumetric, borosilicate glass, 100 mL capacity)
G - Joints (borosilicate glass, spherical, 12/5, ball, socket, and clamp)
H - Ferrules, T-814-1, T-813-1, T-4-4-1, T-403-1
I - Connector, SS-400-7-2 (2 each)
J - Valve (stainless steel, polytetrafluoroethylene packing, Whitey Cat No 55, or equivalent)
K - Syringe (glass, 100 mL capacity, with 8 - 12 in polytetrafluoroethylene needle)
L - Rod (polytetrafluoroethylene or polyethylene, ¼ in OD drilled and a 1/16 OD × 0.025 in wall tube inserted)
M - Reducer, SS-400-R-8
N - Beaker (glass, 1000 mL capacity)
O - Flask (volumetric, borosilicate glass, 25 mL capacity)
P - Hotplate (adjustable heat range)

NOTE: All fittings, stainless steel, Swagelok or equivalent (D, E, H, I, M)

FIGURE 1. *NVR Apparatus*

residue vessel should not exceed 2 to 4 mL at the equilibrium evaporation rate. Adjust the sample delivery valve to maintain the evaporation pressure at less than 60 mm Hg. After 100 mL of propellant has been evaporated (ca 30 minutes), allow the residue vessel to purge for an additional five minutes to ensure complete evaporation of volatile material. Remove the water bath, disconnect the aspirator, wipe the outside of the residue vessel, and remove it from the apparatus. Allow the residue vessel to stand near the analytical balance for at least twenty minutes before weighing. Weigh the residue vessel. Record the weight. Clean the residue vessel by refluxing 5 mL of 5N H_2SO_4 in the vessel for several minutes followed by several rinses with distilled water. The vessel may be dried as described above or by gently heating the vessel with a burner while purging with dry nitrogen. Regardless of the drying method used, allow at least twenty minutes for the vessel to equilibrate to ambient temperature and humidity before weighing.

4.3.7.1.2 Calculations. Calculate the nonvolatile residue of the propellant as follows:

$$\%NVR = \frac{(W_2 - W_1) \times 100}{V \times D}$$

where

W_1 = Weight of clean vessel in grams.

W_2 = Weight of residue and vessel in grams.

V = Volume of sample used in mL.

D = Density of hydrazine (1.01 g/mL)

Report the averaged result of duplicate NVR determinations.

4.3.7.1.3 Equipment. The following equipment shall apply as test conditions of 4.3.7.

a. Components described in figure 1.

b. Tubing - polyethylene, ½ inch OD, borosilicate glass, ½ inch OD.

c. Clamps - hose, to fit ½ inch OD tube.

4.3.7.2 Rotary evaporation.

4.3.7.2.1 Procedure. Dry a 250 mL round bottom flask in an oven at 110°C for one hour. Allow flask to cool in a desiccator and weigh on the analytical balance. Repeat above procedure until weight remains constant to ± 2 mg. Transfer 100 mL of hydrazine into the tared 250 mL flask. Place the flask on the evaporator using a standard taper Teflon sleeve as a seal. Attach a water aspirator pump to the evaporator via a one-liter suction flask and evaporate the hydrazine to dryness. A warm bath may be placed around the rotating flask to aid evaporation.

WARNING

The contact of hydrazine vapor with metal surfaces, as in a metal rotary evaporator, must be avoided. Do not exceed 40°C during the initial evaporation phase when hydrazine liquid is present. Chemical splash proof goggles must be worn throughout the entire evaporation process.

When no more hydrazine distills over, the water bath is lowered. Final high boiling components (mainly aniline) are distilled under vacuum at temperatures up to 100°C using a hot air gun for heating. The flask is then removed and dried in an oven at 110°C for one hour and weighed as before to a constant weight.

4.3.7.2.2 Calculations. Use equation in 4.3.7.1.2.

4.3.7.2.3 Equipment.

a. All glass rotary evaporator, Rincho-Buchi model VE 50 GD or equivalent.

b. Flask, round bottom, 250 mL, with standard taper neck to fit evaporator.

c. Water aspirator - glass or polyethylene.

4.3.7.3 Nonvolatile residue. This method involves the gradual evaporation of hydrazine sample on an explosion proof hot plate in a fume hood. The difference in weight before and after evaporation is calculated as nonvolatile residue.

4.3.7.3.1 Equipment.

CAUTION

Metal surfaces such as iron, platinum, etc, may reduce the ignition temperature of hydrazine; therefore, care must be taken to ensure that Pyrex is always used in this equipment.

a. Hot plate, explosion proof.

b. High efficiency fume hood.

4.3.7.3.2 Sample analysis. Place three clean 125 mL Erlenmeyer flasks in an oven at 100°C for 30 minutes. Label one as the blank and the others as samples 1 and 2. Remove flasks from oven and place in a desiccator to cool for one hour. Weigh each clean, dry flask to the nearest 0.0001 g. Record the sample flask weight as A and the blank flask weight as C. Pipet 40 mL of hydrazine sample into the sample flasks marked 1 and 2. Add 40 ml of water to each sample of hydrazine in flasks 1 and 2. Hydrazine and water form an azeotrope (constant boiling mixture) with a maximum boiling point of 120.5°C (771 mm Hg pressure). Therefore, when anhydrous hydrazine and water are mixed, a corresponding eutectic of 76.0 mole percent hydrazine is the maximum concentration obtained. This eliminates any significant hazard in evaporating a hydrated sample of hydrazine to dryness. Pipet the same volume of distilled

water into the blank flask as was pipetted into the sample flask. Place each flask on a hot plate which is set to a temperature of 150 - 200°C. Evaporate to dryness, but do not bake. Remove flasks from hot plate and place them in oven set at 110°C for 30 minutes. Remove flasks from oven and place in a desiccator for one hour to cool. Weigh each flask to the nearest 0.0001 g. Record the sample flask weight as B and the blank flask weight as D.

NOTE

Save the residue for chloride determination (4.3.4).

4.3.7.3.3 Calculations.

$$\%NVR = \frac{(Weight\ B - Weight\ A) - (Weight\ D - Weight\ C) \times 100}{Sample\ size, mL \times density\ of\ N_2H_4, g/mL}$$

where

NVR = Nonvolatile residue

A = Weight of sample flask

B = Weight of sample flask and residue

C = Weight of blank flask

D = Weight of blank and water residue

4.3.8 Carbon dioxide. The carbon dioxide content of hydrazine shall be determined by one of the following methods. Method 4.3.8.1 shall be the referee method.

4.3.8.1 Determination of carbon dioxide by gas chromatographic analysis.

4.3.8.1.1 Procedure. Assemble the apparatus as shown in Figure 2 and connect a gas buret to the gas exit. Adjust the needle valve so that the flow at the gas exit is 50 - 100 mL/min. Adjust the gas chromatograph carrier gas flow to 30 - 60 mL/min, the column temperature to 100 to 150°C, and the detector temperature to 150 to 200°C. Adjust the detector current to the manufacturer's recommended level for nominal sensitivity. Position the gas sampling valve and the stopcocks so that sparge gas passes through the CO_2 trap to liquid nitrogen temperature to collect a sample for background CO_2 determination. Collect the sample for 30 to 45 min and then position the stopcocks so that the sparge gas bypasses the cooled portion of the trap. Position the gas sampling valve so that the carrier gas will flow through the bypass line of the trap, and warm the lower portion to ambient temperature. Inject the trapped gases into the gas chromatograph by rotation of the stopcocks to the collect position. Determine the CO_2 peak height or area and record the results. Position the gas sampling valve so the sparge gas is again flowing through the trap and cool the trap to liquid nitrogen temperature. Immediately inject a 0.25 mL propellant sample into the septum inlet of the apparatus and allow 30 to 45 min for complete transfer of the CO_2 from the sulfamic acid bubbler to the trap. Repeat the trapped sample injection sequence described earlier for the background determination and record the sample CO_2 peak height or area.

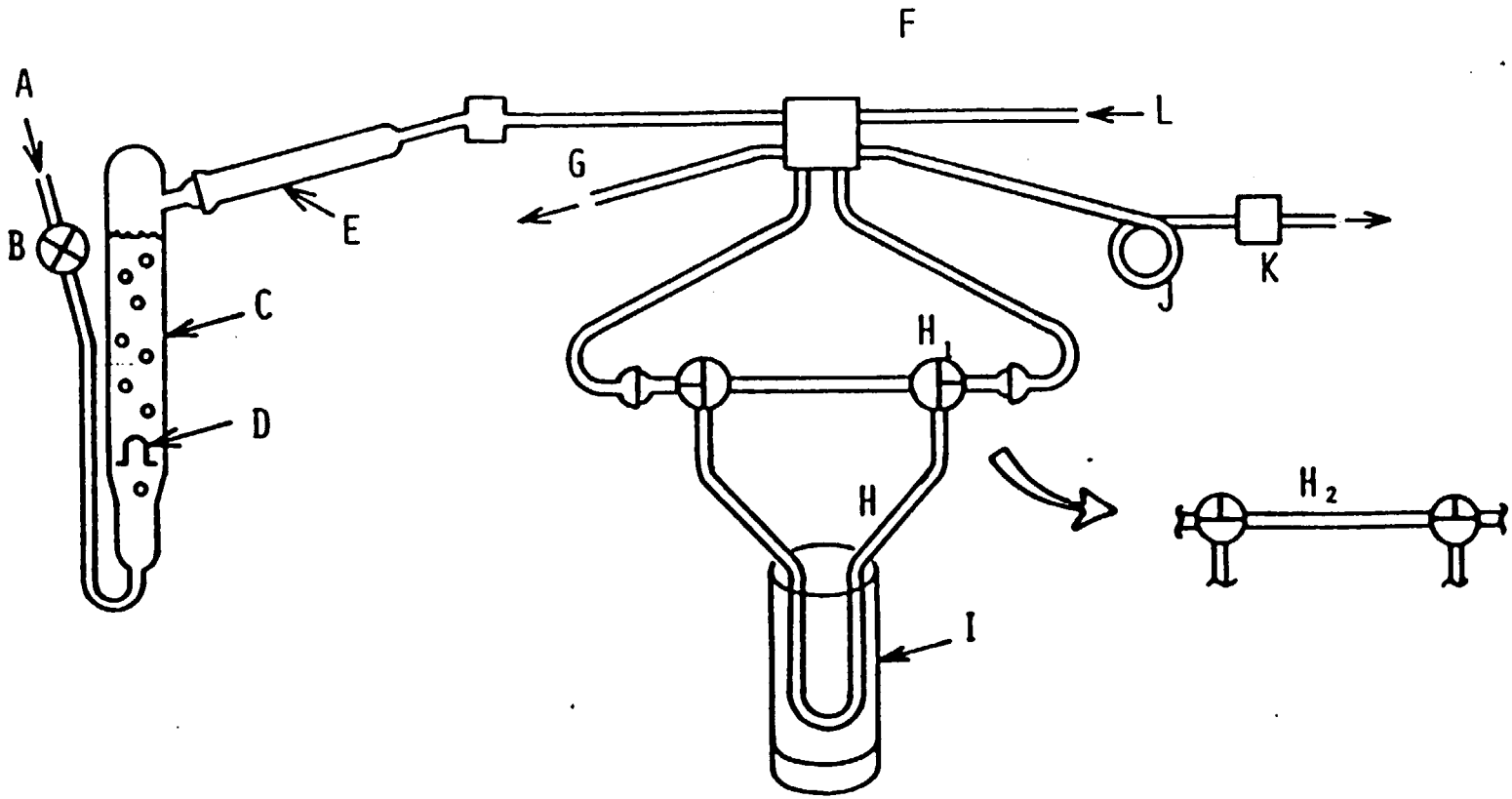

A - Sparge gas inlet

B - Needle valve

C - Reactor with coarse frit and sulfamic acid solution

D - Septum inlet for propellant

E - $Mg(ClO_4)_2$ drying tube

F - 6 or 8 port gas sampling valve

G - Sparge gas vent

H - LN_2 trap for CO_2
H_1 (collect position)
H_2 (bypass position)

I - Dewar for LN_2

J - Charcoal GC column

K - TC Detector

L - Carrier gas inlet

FIGURE 2. *CO_2 Apparatus*

4.3.8.1.2 Propellant transfer. To achieve accurate CO_2 results, all propellant transfers must be performed in a CO_2-free atmosphere (ie a gaseous nitrogen dry box). Propellant in the sampler shall be transferred in an inert atmosphere to septum sealed vials. The vials shall be stored in an inert gas purged container when not actually being sampled. Use an ordinary ½ cc glass syringe with a small amount of "Apiezon L". The gas tight syringe shall be cleaned and dried between each propellant sample injection into the apparatus.

4.3.8.1.3 Calculation. Calculate the CO_2 level of the propellant as follows:

$$\%CO_2 = (R_s - R_b) \times S$$

where

R_s-R_b = CO_2 response due to the sample minus CO_2 response due to the background, peak height or area.

S = Sensitivity, $\%CO_2$ per unit response.

4.3.8.1.4 Calibration. Accurately weigh 0.130 g ammonium carbonate monohydrate (ACS) [$(NH_4)_2CO_3 \cdot H_2O$] into a tared glass vessel which will accept a vapor tight cap and will contain 100 mL of liquid. Place the vessel in the propellant transfer apparatus (dry box) which contains the propellant sample. Transfer 100 mL of propellant to the vessel, cap the vessel. Use sample or other known hydrazine. Dissolve and thoroughly mix the ammonium carbonate solution. Remove the vessel from the transfer apparatus and weigh the container. Calculate the CO_2 added as follows:

$$\%CO_2\ added = \frac{0.130 \times 44.01 \times 100}{\left[total\ wt - (tare + 0.130)\right] \times 114.1}$$

Transfer a portion of the calibration standard to a septum sealed vial and use the procedure described in 4.3.8.1 to determine the response due to the CO_2 sensitivity of the apparatus as follows:

$$S = \frac{\%CO_2\ added}{R_{std} - R_s}$$

where

R_{std}-R_s = The response due to the CO_2 in the standard minus the response due to the sample, peak height or area.

4.3.8.1.5 Reagents and equipment.

4.3.8.1.5.1 Reagents.

a. Sulfamic acid, aqueous, 90% saturated solution.

b. Bromcresol green, indicator, several drops added to the sulfamic acid solution will provide a visual indication of when the solution is spent.

c. Charcoal, coconut, 60/80 mesh, activated, or column of equivalent resolution.

4.3.8.1.5.2 Equipment.

a. Reactor, sulfamic acid, constructed so that the volume is approximately 75 cc, borosilicate glass. (See Figure 2.)

b. Drying tube, $Mg(ClO_4)_2$, approximately 6" × ½", borosilicate glass.

c. Trap, CO_2, borosilicate glass, constructed with 6 mm OD tubing, the lower loop should contain glass beads to increase the condensing surface area.

d. Valve, gas sampling, 6 or 8 port.

e. Valve, needle, for regulation of the sparge gas.

f. Dewar, conical, to fit trap.

g. Gas chromatograph, equipped with a thermal conductivity detector, 6' × 1/8" 60/80 mesh charcoal column.

h. Recorder, potentiometric, 1 mv span, 1 sec FS pen speed.

i. Integrator, mechanical or digital, optional.

4.3.8.2 Determination of carbon dioxide in hydrazine propellants by infrared analysis. This method is to be utilized to determine concentration of carbon dioxide (CO_2) in hydrazine, within a range of 1 - 2 mg/kg (ppm). The sample of propellant is injected into a solution of 20% phosphoric acid which absorbs the hydrazine and ammonia. Carbon dioxide is liberated from the acidic solution and is swept out of the solution by a stream of nitrogen through a sulfuric acid solution to remove water vapor and measured by infrared technique.

4.3.8.2.1 Calibration procedure.

a. Assemble the apparatus as shown in Figure 3.

b. Adjust the flow of nitrogen purge gas to 200 cc/min by use of flowmeter.

c. Add 200 mL of 20% phosphoric acid containing several drops of bromcresol green indicator to the CO_2 reaction flask, turn on the magnetic stirrer to give vigorous, constant stirring. Once set, the stirring rate and nitrogen flow should be kept constant throughout the analysis.

d. After the apparatus has purged for 30 minutes, set the power to range 1 position. Adjust the zero on the infrared analyzer by using one zero adjusting knob and the shutter setting.

4.3.8.2.2 Standardization.

a. Inject 25 µL of standard anhydrous sodium bicarbonate solution into the phosphoric acid (25 ppm level) solution via the septum on the phosphoric acid containing unit.

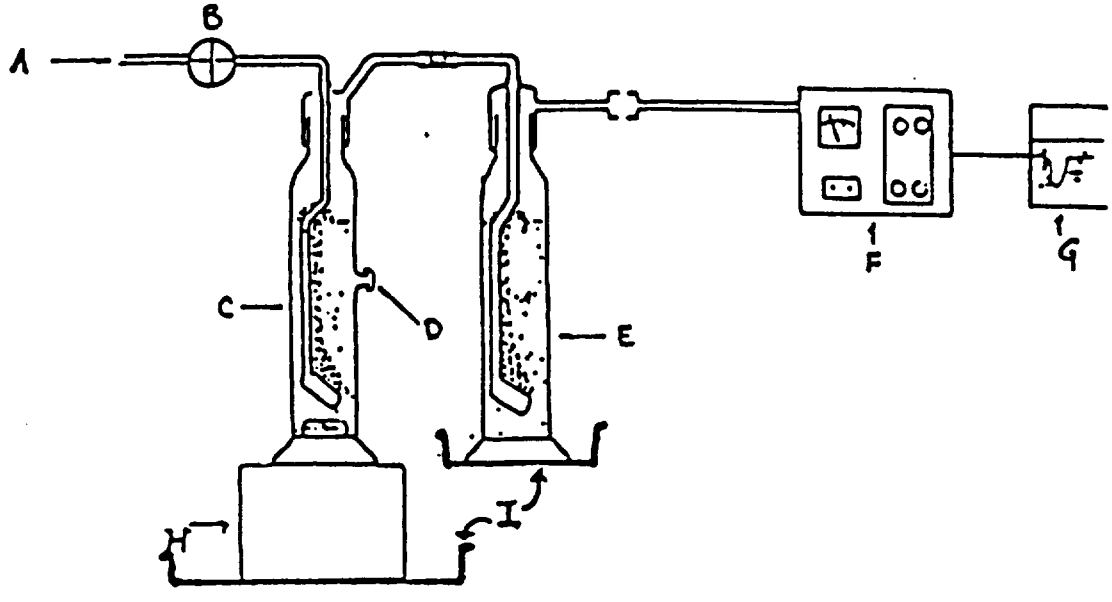

A. Sparge gas inlet

B. Needle valve

C. Reactor and phosphoric acid solution

D. Septum inlet for propellant

E. Concentrated H_2SO_4 trap for removing H_2O

F. Infrared analyzer

G. Recorder

H. Magnetic stirrer

I. Plastic spill trays

FIGURE 3. *CO_2 Apparatus*

b. Adjust the gain control so the 25 mg/Kg standard will read 50% of the scale on the infrared analyzer or the strip chart recorder. (It takes two minutes to reach maximum deflection from the infrared analyzer. 1 scale unit = 0.5 mg/Kg CO_2). Wait ten minutes or until the infrared analyzer scale goes back to zero.

c. Repeat with an injection of 10 µL - scale on infrared analyzer should read 20 units (10 mg/Kg CO_2).

4.3.8.2.3 Sample analysis. Inject 1 mL of hydrazine sample into the phosphoric acid reaction flask. Record the reading from the infrared analyzer scale or the strip chart recorder (from the zero point).

4.3.8.2.4 Reagents. Accurately weigh 0.19 g of anhydrous sodium bicarbonate ($NaHCO_3$) reagent grade into 100-mL volumetric flask and dilute to volume with water. A 25-mL sample of this solution will provide 0.25 mg of CO_2 per mL of the phosphoric acid solution.

4.3.8.2.5 Equipment.

a. Reactor, phosphoric acid, 250-mL glass wash bottle.

b. Drying bottle, 200-mL glass wash bottle filled with concentrated sulfuric acid solution.

c. Beckman model 865 non-dispersive infrared analyzer.

4.3.9 Other volatile carbonaceous material. Other volatile carbonaceous material shall be determined by a gas chromatographic method.

4.3.9.1 Procedure. Use the column, test conditions, and sample size described in paragraph 4.3.2.1. A flame ionization detector shall be used. UDMH, methanol, and isopropyl alcohol emerge from the column as a single peak and MMH emerges immediately after the water peak. Ammonia, which emerges prior to the combined UDMH/alcohols peak shall not be summed with the carbonaceous material. Aniline will emerge from the column 30 - 45 minutes after the first injection. Allow the baseline to stabilize before injecting a second series of samples.

4.3.9.2 Calibration. Add 9.4 microliters of UDMH and 8.3 microliters of MMH to 75 milliliters of propellant sample contained in a 4 oz screw-capped bottle, cap and mix the solution thoroughly. Transfer a portion of this calibration mixture to a sample vial. Analyze both samples and record the areas of the UDMH and MMH peaks.

4.3.9.3 Calculations. The combined UDMH/alcohols peak shall be calculated as percent UDMH. MMH is calculated separately.

$$\%UDMH = \frac{0.01A_s}{A_c - A_s}$$

where

A_s = Area of sample UDMH times its attenuation factor.

A_c = Area of calibration UDMH times its attenuation factor.

$$\% MMH = \frac{0.01 A_s}{A_c - A_s}$$

where

A_s = Area of sample MMH times its attenuation factor.

A_c = Area of calibration MMH times its attenuation factor.

$$\% Other\ volatile\ carbonaceous\ material = \% UDMH + \% MMH$$

NOTE

Peak height may be substituted for peak area providing peak is sharp.

4.3.9.4 Reagents and equipment. The following reagents and equipment shall apply as test conditions of 4.3.9.

4.3.9.4.1 Reagents.

a. UDMH - conforming to MIL-PRF-25604.

b. MMH - conforming to MIL-PRF-27404.

4.3.9.4.2 Equipment. As required in 4.3.2.1, except gas chromatograph shall be equipped with a flame ionization detector, splitless capillary inlets.

5. PACKAGING

5.1 Packaging. For acquisition purposes, the packaging requirements shall be as specified in the contract or order (see 6.2). When actual packaging of materiel is to be performed by DoD personnel, these personnel need to contact the responsible packaging activity to ascertain requisite packaging requirements. Packaging requirements are maintained by the Inventory Control Point's packaging activity within the Military Department or Defense Agency, or within the Military Department's System Command. Packaging data retrieval is available from the managing Military Department's or Defense Agency's automated packaging files, CD-ROM products, or by contacting the responsible packaging activity.

6. NOTES

(This section contains information of a general or explanatory nature that may be helpful but is not mandatory.)

6.1 Intended use. The propellant described by this specification is intended for use as an fuel in rocket engines.

6.2 Acquisition requirements. Acquisition documents must specify the following:

a. Title, number, and date of the specification.

b. Grade of the propellant required (see 1.2).

c. Issue of DoDISS to be cited in the solicitation, and, if required, the specific issue of individual documents referenced (see 2.2.1 and 2.3).

d. Method of shipment, type and capacity of containers.

e. Quantity by weight.

f. When a different sampling plan is required (see 4.2.2.1).

g. Packaging requirements (see 5.1).

6.3 Part or identifying number (PIN). The PINs to be used for hydrazine acquired to this specification are created as follows:

M 26536 - X Example of PIN: M26536-S

- X: Grade (see 1.2). Use "S" for standard; "M" for monopropellant; "H" for high purity.
- 26536: Specification number.
- M: Prefix for military specification.

6.4 Subject term (key word listing).

Fuel
Hydrazine
Monopropellant
Propellant
Rocket engine

6.5 Changes from previous issue. Marginal notations are not used in this revision to identify changes with respect to the previous issue due to the extent of the changes.

Custodians
Navy - AS
Air Force - 68

Review Activities
Air Force - 19

Preparing Activity
Air Force - 68

Civil Agency Interest
NASA

(Project 9135-0136)

STANDARDIZATION DOCUMENT IMPROVEMENT PROPOSAL

INSTRUCTIONS

1. The preparing activity must complete blocks 1, 2, 3, and 8. In block 1, both the document number and revision letter should be given.
2. The submitter of this form must complete blocks 4, 5, 6, and 7.
3. The preparing activity must provide a reply within 30 days from receipt of the form.

NOTE: This form may not be used to request copies of documents, nor to request waivers, or clarification of requirements on current contracts. Comments submitted on this form do not constitute or imply authorization to waive any portion of the referenced document(s) or to amend contractual requirements.

I RECOMMEND A CHANGE:

1. DOCUMENT NUMBER: MIL-PRF-26536E
2. DOCUMENT DATE (YYMMDD): 970924
3. DOCUMENT TITLE: Propellant, Hydrazine
4. NATURE OF CHANGE (Identify paragraph number and include proposed rewrite, if possible. Attach extra sheets as needed.)
5. REASON FOR RECOMMENDATION
6. SUBMITTER
   a. NAME (Last, First, Middle Initial)
   b. ORGANIZATION
   c. ADDRESS (Include Zip Code)
   d. TELEPHONE (Include Area Code)
      (1) Commercial
      (2) AUTOVON (If applicable)
7. DATE SUBMITTED (YYMMDD)
8. PREPARING ACTIVITY
   a. NAME: SA-ALC/SFSP
   b. TELEPHONE (Include Area Code)
      (1) Commercial: (210) 925-7847
      (2) AUTOVON: 945-7847
   c. ADDRESS (Include Zip Code): 1014 Billy Mitchell Blvd, STE 1, Kelly AFB, TX 78241-5603

IF YOU DO NOT RECEIVE A REPLY WITHIN 45 DAYS, CONTACT:
Defense Quality and Standardization Office
5203 Leesburg Pike, Suite 1403, Falls Church, VA 22041-3466
Telephone (703) 756-2340 AUTOVON 289-2340